MARYLAND DEPARTMENT OF TRANSPORTATION

MOTOR VEHICLE ADMINISTRATION

Maryland Commercial Driver License Manual

2005 CDL Testing Model

(August 2017)

CDL Driver's Manual
COPYRIGHT © 2005 AAMVA
All Rights reserved

This material is based upon work supported by the Federal Motor Carrier Safety Administration under Cooperative Agreement No. DTFH61-97-X-00017. Any opinions, findings, conclusions or recommendations expressed in this publication are those of the Author(s) and do not necessarily reflect the view of the Federal Motor Carrier Safety Administration.

COPYRIGHT © 2005 AAMVA. All rights reserved

This material has been created for and provided to State Driver License Agencies (SDLAs) by AAMVA for the purpose of educating Driver License applicants (Commercial or Non-Commercial). Permission to reproduce, use, distribute or sell this material has been granted to SDLAs only. No part of this book may be reproduced or transmitted in any form or by any means, electronic or mechanical, including photocopying, recording, or by any information storage and retrieval system without express written permission from the author / publisher. Any unauthorized reprint, use, distribution or sale of this material is prohibited.

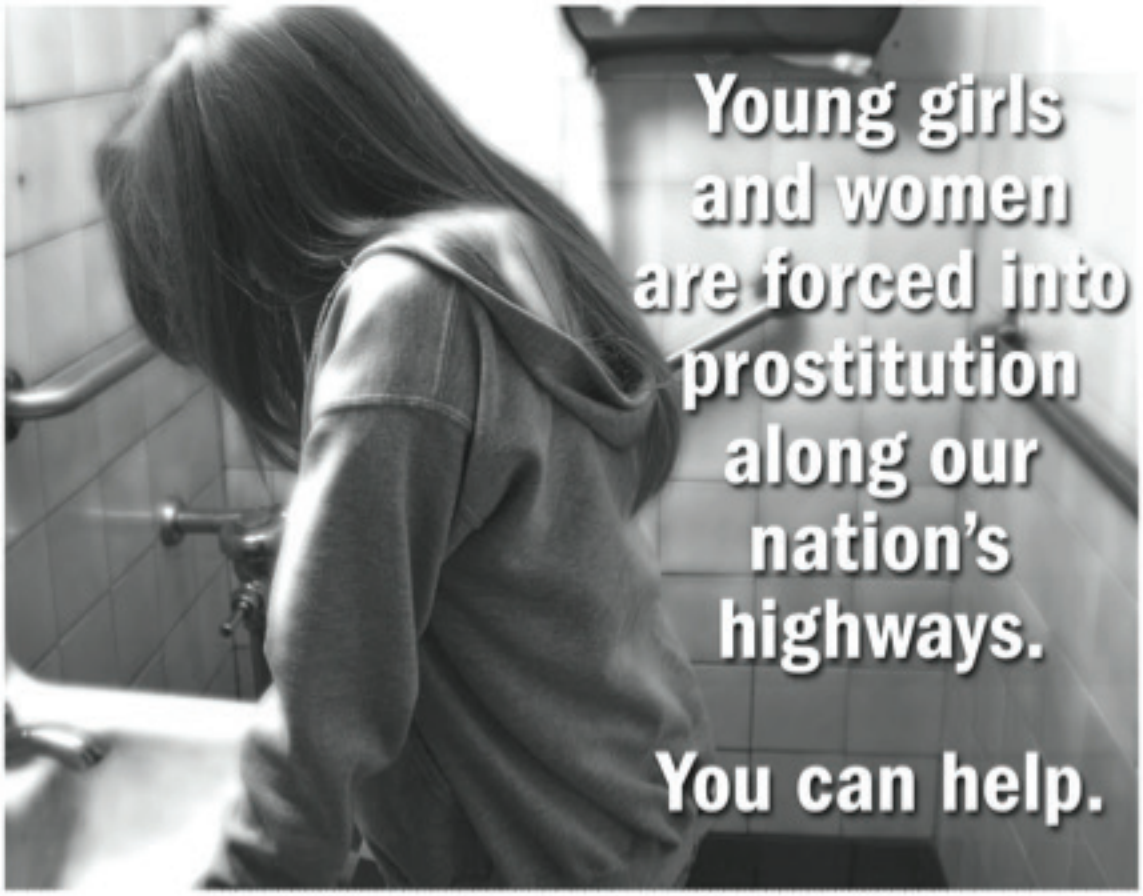

Everyday Heroes Needed.

TRUCKERS AGAINST TRAFFICKING

Human trafficking is modern-day slavery. Traffickers use force, fraud and coercion to control their victims. Any minor engaged in commercial sex is a victim of human trafficking. Trafficking can occur in many locations, including truck stops, restaurants, rest areas, brothels, strip clubs, private homes, etc.

Truckers are the eyes and the ears of our nation's highways and are already making calls that are saving lives. If you see a minor working any of those areas or suspect pimp control, call the national hotline and report your tip.

Make the Call, Save Lives.

National Hotline:
1-888-373-7888

truckersagainsttrafficking.org

1-888-373-7888 (US)
1-800-222-TIPS (Canada)
01800-5533-000 (Mexico)

Kevin Kimmel, truck driver for Con-way Truckload and winner of TAT's 2015 Harriet Tubman Award

In January 2015, an RV pulled into a truck stop in Virginia. Observant professional truck driver Kevin Kimmel recognized suspicious activity around that RV, which had pulled back by the truck line, and decided something was off. Instead of turning a blind eye, he made a call that brought law enforcement out to the scene within a few minutes. After interviewing the occupants of the vehicle, they discovered that a young woman, 20 years old, had been kidnapped from Iowa two weeks prior. She had been beaten, raped, her whole body burned by instruments heated on the RV stove, branded and starved. She was being sold by her traffickers, Laura Sorenson and Aldair Hodza, through sex ads on Craigslist, where men were purchasing her and then arriving at the RV to rape her. She was dying from malnutrition and the torture she was subjected to … had the call not been made that brought law enforcement out to that truck stop, doctors said she would have died within the next few days. Now a recovering survivor, this young woman calls Kimmel her guardian angel. He calls himself a Trucker Against Trafficking.

Truckers Against Trafficking is a non-profit organization that has been working with the trucking industry since 2009 to provide the needed training and tools to enable members of the industry to both recognize human trafficking when they see it happening and to know what actions to take to enable law enforcement to effectively fight this crime. Through this training and these tools, truckers are becoming Everyday Heroes like Kevin Kimmel, who was also named TAT's 2015 Harriet Tubman Award winner.

One of the tools TAT provides is a wallet card with red flags to look for, questions to ask if you suspect someone is a victim and actionable information to report. This wallet card is available by App, from the appropriate App Store, on all smart phones, whether Android, iPhone or Windows format, as well as by emailing tat.truckers@gmail.com, for a version to carry in your wallet.

Human trafficking is modern-day slavery. Traffickers use force, fraud and coercion to control their victims. Any minor engaged in commercial sex is a victim of human trafficking. Trafficking can occur in many locations, including truck stops, restaurants, rest areas, hotels/motels, strip clubs, private homes, etc. Truckers are the eyes and the ears of our nation's highways. If you see a minor working any of those areas or suspect that the person selling sex is under someone else's control in order to make a quota, call the National Hotline and report your tip:

1-888-3737-888 (US) ▪ 1-800-222-TIPS (Canada)
01800-5533-000 (Mexico) ▪ Text INFO or HELP to BeFree (233733)

For law enforcement to open an investigation on your tip, they need "actionable information," and as many details as you can provide. Specific tips helpful when reporting to the hotline would include:

- Descriptions of cars (make, model, color, license plate number, etc.) and people (height, weight, hair color, eye color, age, etc.) Take a picture if you can.
- Specific times and dates (When did you see the event in question take place? What day was it?)
- Addresses and locations where suspicious activity took place

Make the Call, Save Lives.

Questions to Ask:

Do you keep your own money? If not, who does?
Do your parents/siblings/relatives know where you are? If not, why not?
When was the last time you saw your family?
Are you physically or sexually abused? Are you or your family threatened? What is the nature of the threats?

Trafficking Red Flags to Look For:

-Lack of knowledge of their community or whereabouts
-Restricted or controlled communication-not allowed to speak for self
-CB chatter about "commercial company" or flashing lights signaling "buyer" location
-Not in control of own identification documents (ID/passport)
-Any acknowledgement that she/he has a pimp and is making a quota
-Signs of branding or tattooing of trafficker's name (often on the neck)

Additionally, TAT provides a powerful, 26-minute training video on its website (www.truckersagainsttrafficking.org), which, when watched along with taking and passing a short test, certifies drivers as TAT-Trained, a designation which can go on your resume. Because professional drivers often find themselves in locations frequented and exploited by human traffickers, they are in a unique position to recognize the signs of human trafficking and to make the call that can lead to victim recovery and perpetrator arrests. Get your wallet card today. Be an Everyday Hero! Make the call (1-888-3737-888); save lives!

TRUCKERS AGAINST TRAFFICKING

1-888-3737-888 (US)
1-800-222-TIPS (Canada)
01800-5533-000 (Mexico)
Text INFO or HELP to BeFree (233733)

INFORMATION FOR THE COMMERCIAL DRIVER

FOREWORD

In 1986, the Congress of the United States passed the **Commercial Motor Vehicle Safety Act**. This Act requires the states to adopt uniform minimum licensing and testing standards for drivers of commercial motor vehicles. By April 1, 1992, all drivers of commercial vehicles needed a Commercial Driver's License. Maryland's Commercial Driver's License Program became effective January 1, 1990.This was the beginning of a new era that resulted in each commercial driver to be looked upon as a professional.

COMMERCIAL MOTOR VEHICLE

A "Commercial Motor Vehicle" means a motor vehicle or combination of motor vehicles used to transport passengers or cargo if the vehicle fits any of the following conditions.

- Any combination of vehicles with a **Gross Combination Weight Rating** (GCWR) of 26,001 or more pounds.
- A vehicle with a **Gross Vehicle Weight Rating** (GVWR) of 26,001 or more pounds (GVWR for a single vehicle or GCWR for a combination of vehicles means: The value specified by the manufacturer as the maximum gross weight).
- Any vehicle which is designed to transport 16 or more passengers, including the driver.
- A vehicle of any size which transports hazardous materials, which requires placarding.

Note: **GROSS COMBINATION WEIGHT RATING (GCWR) AND GROSS VEHICLE WEIGHT RATING (GVWR) MEANS THE VALUE SPECIFIED BY THE MANUFACTURER.** This is determined from the manufacture plate on the vehicle/trailer.

MARYLAND COMMERCIAL DRIVER LICENSE CLASSES & ENDORSEMENTS

Each driver applicant must possess and be tested on his/her knowledge and skills, for the commercial motor vehicle for which he/she desires a commercial driver's license, and obtain the appropriate endorsement(s) where required.

Class A License: Authorizes the licensee to operate Tractor/Trailer or Combination of vehicles with a GCWR of 26,001 or more pounds if the GVWR of the vehicle being towed is in excess of 10,000 pounds.

Class B License: Authorizes the licensee to operate any single vehicle with a GVWR of 26,001 or more pounds; Any such vehicle towing a vehicle not in excess of 10,000 pounds GVWR.

Class C License: Authorizes the licensee to operate any single vehicle less than 26,001 pounds GVWR; or any such vehicle towing a vehicle not in excess of 10,000 pounds GVWR, and is designed to transport 16 or more passengers including the driver, or is used in the transportation of materials found to be hazardous for the Hazardous Materials Transportation Act and which requires the motor vehicle to be placarded under the Hazardous Materials Regulations.

Endorsements:

T = Doubles/Triple Trailers
P = Passenger Vehicles
N = Tank Vehicles
H = Hazardous Materials
S = School Buses
X = Tank & Hazardous Materials

Pages 1 through 13-3
of this CDL Driver's
MANUAL
Copyright AAMVA
All Rights Reserved
UED BY PERMISSION
AAMVA

VEHICLES THAT HAVE BEEN EXCLUDED

Waivers have been granted for the operation of some commercial vehicles. You are not required to have a Commercial Driver's License to drive a vehicle that has been excluded. **However, you must have a Maryland non-commercial driver's license of the appropriate class to operate a vehicle that has been excluded. (With the exception of fire apparatus, that may be operated by the use of an Emergency Vehicle Operator Card (EVOC) and a valid State driver's license. See your fire chief for details).**

The following vehicles have been excluded from CDL requirements in Maryland:

1. Controlled and operated by a farmer;
   - Used to transport agricultural products, farm machinery, or farm supplies to or from a farm;
   - Not used in the operations of a common or contract motor carrier; and
   - Used within 150 miles of the person's farm;

2. An emergency vehicle;
   - Equipped with audible and visual signals (fire apparatus); and
   - Operated by a member of, or a person in the employ of, a volunteer or paid fire or rescue organization;

3. A vehicle owned or operated by the United States Department of Defense if it is controlled and operated by;
   - Any member of the military reserves or National Guard on active duty including personnel on full-time National Guard duty and personnel on part-time training; or

4. A motor vehicle designed and constructed primarily to provide temporary living quarters for recreational, camping, or travel use.

PHYSICAL QUALIFICATIONS (49 CFR 391.41)

A person shall not drive a commercial motor vehicle unless they are physically qualified to do so and has on their person the original, or a photographic copy (no alterations or erasures), of a medical examiner's certification that they are physically qualified to drive a commercial motor vehicle.

Based on a medical disqualification you may be eligible to process for an Intrastate (Maryland Only) or Interstate (Federal) Waiver. Maryland Motor Vehicle Administration will only consider issuing CDL Intrastate Waivers for the physical/medical conditions listed below.

- Vision
- Amputation and loss of limb (Must have working prosthesis)
- Power grasping and prehension
- Insulin dependent diabetes
- Deaf/Hard of Hearing (LIMITED Eligibility)

The Motor Vehicle Administration will not consider an intrastate waiver for an individual who maintains a Hazardous Materials, Passenger and/or School Bus endorsements.

The Federal Motor Carrier Safety Administration may issue a waiver to individuals who do not meet the qualifications of 391.41 Title 49 CFR the Federal Motor Carrier Safety Regulations that cover amputation, loss of a limb, power grasping or prehension problems, insulin dependent diabetics and deaf/hard of hearing (LIMITED eligibility).

MEDICAL CERTIFICATION AND SELF-CERTIFICATION

MEDICAL CERTIFICATION (Form MCSA-5876)

As of **January 30, 2014**, the Maryland Motor Vehicle Administration (MVA) enacted new procedures for commercial driver's license (CDL) holders to comply with requirements implemented by the Federal Motor Carrier Safety Administration (FMCSA). As of **July 8, 2015**, FMCSA revised the Medical Examiner's Certificate (Med Cert - formerly DOT card). The new form (MCSA-5876) will be provided by the Medical Examiner.

All CDL holders are required to provide a valid updated medical certification card (Med Cert) and self-certify to the type of commerce (see below) to the MVA throughout their licensing period (where required). The MVA will add the medical certification status and the information from the medical certification documents (DOT card, waiver/exemption if required) to your commercial driving record.

You **DO NOT** need to submit your medical certification (Med Cert) information with the MVA until you have been directly contacted by the Administration. The MVA will send correspondence to your residence/mailing address 45 days prior to expiration requesting documentation.

As of **October 1, 2016**, if you are contacted by the MVA for documentation and fail to do so within the period indicated, **your entire commercial driving privileges will be automatically downgraded to a non-commercial Class C license and you will need to visit a MVA branch office to obtain the Class C license. If you have been downgraded, you will need to visit a MVA branch office to reinstate your CDL and you will be required to present valid Med Cert documentation at that time.**

It is imperative that all CDL holders maintain a current residence/mailing address with the MVA (provided in person) in order to receive correspondence and avoid an automatic downgrade of your commercial driving privilege. MVA mail is not forwarded and if you do not comply, you are not authorized to operate a commercial motor vehicle.

For your reference, below is a brief explanation of the self-certification categories and the related medical certification requirements

SELF-CERTIFICATION

All CDL holders will be required to select one of the categories listed below:

- **NON-EXCEPTED INTERSTATE (NI) -** The CDL holder is qualified to drive a commercial motor vehicle across state lines in accordance with 49 CFR Part 391 of the Federal Motor Carrier Safety Regulation (FMCSR).
- **NON-EXCEPTED INTRASTATE (NA) -** The CDL holder is qualified to drive a commercial vehicle **ONLY** within the state of Maryland and has an approved MVA CDL Medical Waiver.
- **EXCEPTED INTERSTATE (EI) -** The CDL holder drives a commercial motor vehicle across state lines ONLY for specific excepted activities, such as to transport school children or staff, sick or injured persons, corpses, etc., in accordance with 49 CFR Part 391 of the Federal Motor Carrier Safety Regulations (FMCSR). Since the driver must meet all Maryland requirements without an MVA CDL Medical Waiver, the CDL holder may select NI to maximize his/her driving options.
- **EXCEPTED INTRASTATE (EA) -** The CDL holder drives a commercial motor vehicle **ONLY** within Maryland. Although exempt from the qualification requirements under 49 CFR Part 391 of the Federal Motor Carrier Safety Regulations (FMCSR) based on the type of driving performed, the CDL holder must meet all Maryland requirements without an MVA CDL Medical Waiver and may select NI to maximize his/her driving options.

COMMERCIAL DRIVER'S LICENSE LEARNERS INSTRUCTIONAL PERMIT (CLP):

You will be required to provide:

- Proof of age
- Lawful admission into the United States (for Hazardous Materials only)
- Proof of Maryland residence
- Valid full Maryland Non-Commercial Driver's License (must be off provisional license).
- Valid Medical Examiner's Certificate (DOT Card), or Intrastate/Interstate Waiver.
- You must be 21 years of age to drive a commercial motor vehicle across state lines (Interstate).
- You must be 18 years of age to drive a commercial motor vehicle within Maryland (Intrastate).
- You must be 21 years of age to haul hazardous materials.
- You must provide Medical Examiner's Certificate (DOT Card); Intrastate/Interstate Waiver prior to taking required tests which includes passing the vision screening and any required CDL knowledge tests before a learner's instructional permit will be issued. You will be required to provide the Medical Examiner's Certificate (DOT Card) during any transactions at the MVA.

When you apply for a Commercial Driver's License you will also be asked to:

- Certify that you do not have a driver's license from more than one state or country and;
- Surrender your current license and;
- Certify that your driver's license and driving privilege is not suspended, revoked, cancelled, or disqualified or subject to any of these actions;
- Provide information to the Motor Vehicle Administration of previous State licenses (to include Washington, D.C.) held in the previous 10 years including previous addresses and license numbers.

KNOWLEDGE TESTS / ENDORSEMENTS

Depending on the class of license and what endorsements you are requesting will determine what CDL knowledge tests are required. A passing score of 80% is required per test. You must provide a Medical Examiner's Certificate (DOT Card) or a valid Intrastate State/Interstate Waiver. If you fail any knowledge test for the second time, you must wait a minimum of seven days before you can re-take that specific test again. The following endorsements will not be listed on your CLP until you have completed and pass your skills test - Double/Triples and Hazmat.

- **General Knowledge Test** is required for all applicants. (Must be successfully passed to proceed to additional knowledge tests).
- **Air Brake Knowledge Test** is required if your vehicle is equipped with air brakes.
- **Combination Vehicles Knowledge Test** is required if you want to drive combination vehicles (Trailer over 10,000 lbs. GVWR).
- **Tanker Knowledge Test** is required if you want to haul liquids in bulk.
- **Double/Triples Knowledge Test** is required to pull double or triple trailers.
- **Passenger Knowledge Test** is required for all bus drivers to include school bus operators. (You must perform a skills test in a bus of the appropriate class/endorsement).
- **School Bus Knowledge Test** is required for all school bus operators, as well as the Passenger Knowledge Test. (You must also perform skills test in a school bus of appropriate class).
- **Hazardous Materials Knowledge Test** is required if you wish to haul hazardous materials. You must pass the hazardous materials knowledge test and provide proof of U.S. Citizenship or lawful permanent resident status. Individuals are required to schedule an appointment for the completion of the electronic Hazmat application and fingerprint/background record check process. **The Administration may not issue a hazardous material endorsement to a commercial driver's license holder without the approval of the Transportation Security Administration (TSA) of the Federal Department of Homeland Security.** You are required to pay the appropriate fees. The Administration may not issue a Learner's Instructional Permit with a Hazardous Materials Endorsement.

a. Maryland law requires that each out-of-state CDL license holder with the Hazardous Materials Endorsement must complete a new TSA Hazmat Threat Assessment Background Record check here in Maryland, even if they completed one previously.
b. Additional Hazmat information may be obtained by contacting the MVA at 1-800-950-1MVA, 1-800-950-1682 or at www.MVA.Maryland.gov or by contacting the TSA at their website, www.TSA.gov and inserting CDL Hazmat in the Search field.
c. Subsequent Hazardous Materials knowledge test are by appointment only if the applicant fails the first test.

SKILLS TEST ARE ADMINISTERED BY APPOINTMENT ONLY:

The CDL Skills Test consists of a:

1) Pre-Trip Inspection to include an air brake test if vehicle is equipped with air brakes;
2) Basic Control Skills Test; and
3) Public Road Test.

NOTE: YOU MUST PASS THE PRE-TRIP INSPECTION TO CONTINUE ONTO THE BASIC CONTROL SKILLS TEST AND YOU MUST PASS THE BASIC CONTROL SKILLS TEST TO CONTINUE ONTO A PUBLIC ROAD TEST.

If you fail any portion of the test you must pay a retest fee before scheduling another appointment.

QUALIFYING SCORES:

- A Pre-Trip Inspection score is based on the type of vehicle.
- A Basic Control Skills Test is based on total points (13 points are a failure). An automatic failure will occur if an individual hits a cone/curb, exceeds time limit (see below), or exits the vehicle to “look”, etc.
- A Public Road Test is based on total points (31 points are a failure) or an automatic failure will occur if there is an accident, running a red light or stop sign, etc.

TIME LIMIT (All Vehicle Classes A, B, & C) (subject to change without notice):

- A Pre-Trip Inspection is 45 minutes.
- A Basic Control Skills Test is 10 minutes per maneuver.
- A Public Road Test on average is 35 to 40 minutes based on MVA location and route.

NOTE: Skills Tests are not available at all Motor Vehicle locations.
Skills Tests are given only by appointment.
Knowledge Tests are given on a walk-in basis initially, then by appointment thereafter.
No test will start after 3:00 p.m. Monday through Friday.
No test will start after 10:00 a.m. Saturday

DRIVING, DRINKING, AND DRUGS

Signing a Maryland’s driver license or a learner’s permit application form enters you into an agreement. It says that if you are detained by a police officer who suspects you are driving or attempting to drive under the influence or intoxicated by alcohol and/or drugs, you agree to submit to a chemical test of your blood, breath, or urine. This is called a Blood Alcohol Concentration, or BAC test.

An alcohol concentration of 0.04% or more when driving a Commercial Motor Vehicle will:

- Disqualify you from driving a commercial motor vehicle for one year (three years if the vehicle was required to be placarded for HAZMAT) for the first offense, and;
- Disqualify you for life for a subsequent offense

An alcohol concentration of 0.08% or more while operating on a commercial driver license, regardless of the vehicle type, will:

- Disqualify you from driving a commercial motor vehicle for one year for the first offense, and;
- Disqualify you for life for a subsequent offense.

Implied Consent:
In Maryland, any person who drives or attempts to drive a motor vehicle on a highway or on any private property used by the public in general, consents to take a test to determine alcohol concentration or a test to determine the concentration of a drug or a controlled dangerous substance. Testing is free of charge to the driver and shall be a breath test to determine alcohol concentration, unless the driver or other persons require medical treatment for serious or life threatening injury or the test equipment is unavailable. In that event, the test shall be a blood test. A test to determine drug or controlled dangerous substance content shall also be a blood test.

A refusal to submit to take a test will:

- Disqualify you from driving a commercial motor vehicle for one year for the first offense, and;
- Disqualify you for life for a subsequent offense.

CDL holders are also subject to driver disqualifications and penalties under Federal Motor Carrier Safety Regulation 385.51.

ALL INDIVIDUALS MAINTAINING A CDL ARE REQUIRED TO PRESENT A VALID MEDICAL EXAMINER'S CERTIFICATE (DOT CARD), OR APPROPRIATE INTRASTATE OR INTERSTATE WAIVER, DURING ALL MVA TRANSACTIONS.

DRIVERS MUST

- Notify their home state Motor Vehicle Administration of any convictions in other states.
- Notify their employer of any convictions.
- Notify their employer of any revocation, suspension, cancellation, or disqualification.
- Provide information to the Motor Vehicle Administration of previous State licenses (to include Washington, D.C.) held in the previous 10 years including previous addresses and license numbers.
- Provide Medical Examiner's Certificate (DOT card) or Intrastate/Interstate Waiver during all MVA transactions.
- Maintain only one driver's license.

CONVICTIONS

Effective September 30, 2005, any convictions you receive for moving violations will be viewed as a cause to disqualify you from driving a commercial vehicle, regardless of whether the moving violation happened while you were driving a commercial vehicle, non-commercial vehicle or your private vehicle.

- Probation Before Judgment (PBJ) is considered a conviction under federal regulations and MD TA § 16-803(d).
- The Administration may not issue any type of temporary, conditional or work restricted license per COMAR 11.11.12.07 and 49 CFR 384.210.

Maryland Motor Vehicle Administration (MVA) works closely with The American Association of Motor Vehicle Administrators (AAMVA) in testing procedures that meet Federal requirements. **Although we make every effort to ensure that the information we provide is accurate, it is not intended to take the place of published State and Federal Laws and Regulations.**

Table Of Contents

Introduction 1-1

Driving Safely 2-1

Transporting Cargo Safely 3-1

Transporting Passengers Safely 4-1

Air Brakes 5-1

Combination Vehicles 6-1

Doubles and Triples 7-1

Tank Vehicles 8-1

Hazardous Materials 9-1

School Bus 10-1

Pre-Trip Vehicle Inspection 11-1

Basic Vehicle Control Skills Test 12-1

On-Road Driving 13-1

Section 1
INTRODUCTION

This Section Covers

- **Commercial Driver License Tests**
- **Medical Requirements**
- **Driver Disqualifications**
- **Other Safety Rules**
- **International Registration Program**

There is a federal requirement that each state have minimum standards for the licensing of commercial drivers.

This manual provides driver license testing information for drivers who wish to have a commercial driver license (CDL). This manual does NOT provide information on all the federal and state requirements needed before you can drive a commercial motor vehicle (CMV). You may have to contact your state driver licensing authority for additional information.

You must have a CDL to operate:

Any single vehicle with a gross vehicle weight rating (GVWR) of 26,001 pounds or more.

A combination vehicle with a gross combination weight rating (GCWR) of 26,001 or more pounds, provided the GVWR of the vehicle(s) being towed is in excess of 10,000 pounds.

A vehicle designed to transport 16 or more passengers (including the driver).

Any size vehicle which requires hazardous material placards or is carrying material listed as a select agent or toxin in 42 CFR part 73. Federal regulations through the Department of Homeland Security require a background check and fingerprinting for the Hazardous Materials endorsement. Contact your local department of driver licensing for more information.

(Your state may have additional definitions of CMVs.)

CDL Classifications

The CDL vehicle classification included in the federal standard, together with the type of cargo to be transported, determine what type of CDL license and endorsement an applicant must apply for. There are three basic vehicle classes or groups:

Class A Combination Vehicles. Any combination of vehicles with gross combination weight rating (GCWR) of 26,001 or more pounds falls in Group A provided the GVWR of the vehicle(s) being towed is ***more than*** 10,000 pounds. Most Class A vehicles are trucks such as truck-tractor/semi-trailer or truck and trailer combinations. However, tractor-trailer buses may be found in a few communities. Driving a Class A vehicle requires considerably more skill and knowledge than driving vehicles in Classes B and C. Since these skills include those required to drive a B and C vehicle, a driver who has a Class A license also may drive vehicles in Classes B and C.

Class B Heavy Straight Vehicles. Any single vehicle with a GVWR of 26,001 or more pounds falls in Group B, or any such vehicle towing another vehicle ***not*** in excess of 10,000 pounds GVWR. Class B includes straight trucks and large buses, including articulated buses. Safely driving these heavy vehicles requires considerably more knowledge and skill than driving the small trucks and buses found in Class C. Since they include the skills required to drive Class C vehicles, drivers who have qualified for a Class B license may also drive vehicles in Class C.

Class C Small Vehicles. Any single vehicle with a GVWR less than 26,001 pounds falls in Group C, or any such vehicle towing another vehicle ***not*** in excess of 10,000 pounds GVWR. However, vehicles of this size are included in the CDL program only if they are: 1) Designed to carry 16 or more passengers including the driver, or (2) Used to transport hazardous materials in quantities requiring placarding under the Hazardous Materials Regulations (49 CFR Part 172, Subpart F) or is carrying material listed as a select agent or toxin in 42 CFR part 73.

There are a great variety of vehicles in Class C. Some rather large Class C vehicles may require more skill and knowledge to operate than do the smaller ones. However, the licensing category is based principally on the type of cargo carried. Because of the seriousness of an accident involving hazardous material or human passengers, the safe operation of even the smaller vehicles in Class C requires special knowledge and the drivers of these vehicles must have a CDL.

STATE OPTIONS: Some states may include more drivers and vehicles in their CDL programs. For example, in some states, a CDL may be required for buses designed to carry fewer than 16 passengers. Going beyond the federal standard is acceptable and the state will need to decide which battery of tests applies to these drivers, or develop a new battery.

CDL Endorsements & Restrictions

Endorsements

All commercial drivers who drive certain types of vehicles or haul certain types of cargo must add endorsements to their CDL license and/or Commercial Learner's Permit (CLP) to show that they have the specialized knowledge required for these operations. There are six kinds of CDL endorsements that may be required, depending on the vehicle or type of cargo.

NOTE: The only endorsements that may be added to a Commercial Learner's Permit (CLP) are:

- ***Passenger (P);***
- ***School bus (S); and***
- ***Tank vehicle (N).***

Double and Triple Trailers (T). Many drivers who are qualified to drive Class A vehicles may wish to pull double or triple trailers. Research shows that considerable additional knowledge and skill is necessary to safely pull double and triple trailers in various traffic conditions and driving environments. Consequently, adding the endorsement to the licenses of Class A drivers is necessary if they wish to pull double or triple trailers. A special knowledge examination on the problems associated with pulling multiple trailers must be passed.

Tank Vehicle (N). Drivers of any commercial motor vehicle that is designed to transport any liquid or gaseous materials within a tank or tanks having an individual rated capacity of more than 119 gallons and an aggregate rated capacity of 1,000 gallons or more that is either permanently or temporarily attached to the vehicle or the chassis must obtain this endorsement. Applies to Class A, B and C (only applicable to Class C if the vehicle is hauling hazardous materials) vehicles. Liquids in bulk cause driving control problems because the cargo is heavy, prone to shifting, and has a high center of gravity. These drivers must pass a special knowledge examination on the problems posed by large volume liquid cargos to add the endorsement to their CDL/CLP.

Passengers (P). Drivers who wish to drive a vehicle having a design capacity to carry 16 or more people, including the driver, must add a passenger endorsement to their CDL/CLP. They must pass a special knowledge examination on safety considerations when transporting passengers and must pass skills tests in a passenger vehicle. The endorsement applies to applicants who wish to drive a bus in any class (A, B, or C).

Hazardous Materials (H). Any driver, regardless of the vehicle Class/Group (A, B, or C) who wishes to haul any material that has been designated as hazardous under 49 U.S.C. 5103 and is required to be placarded under subpart F of 49 CFR part 172; or any quantity of a material listed as a select agent or toxin 42 CFR Part 73 must add a hazardous materials endorsement to their CDL. S/he must pass a special written examination on how to recognize, handle, and transport hazardous materials.

The Transportation Security Administration (TSA) and the US Department of Transportation require background checks on commercial drivers who are certified to transport hazardous materials. The background checks include a review of criminal, immigration and FBI records. If the driver is found to represent a security threat, TSA will notify the person and the state will deny issuance of an endorsement.

Combination Hazardous Materials and Tank Vehicle (X). Drivers of tank vehicles who haul hazardous materials or waste in amounts requiring placards must add an X endorsement to their CDL, showing that they have passed the special knowledge examinations for both tank vehicles and hazardous materials.

School Buses (S). Drivers who wish to drive a school bus, must add a school bus endorsement to their CDL/CLP. They must pass a special knowledge examination on safety considerations when transporting passengers in a school bus and must pass skills tests in a school bus. The endorsement applies to applicants who wish to drive a school bus in any class (A, B, or C).

In addition to these six required endorsements, states may add special endorsements of their own as they see fit.

Restrictions

Restrictions may be added to Commercial Driver Licenses/Permits based upon the type of vehicle and equipment that the driver uses for the Skills Test. There are ten standardized restriction codes.

NOTE: If a CLP is issued with a Passenger (P) or a School Bus (S) endorsement, it must also contain a (P) – No passengers in a CMV bus restriction.

If a CLP is issued with a Tanker (N) endorsement, it must also contain a (X) – No cargo in a CMV tank vehicle.

(E) - No manual transmission. If an applicant performs the skills test in a vehicle equipped with an automatic transmission, the State must indicate on the CDL, if issued, that the person is restricted from operating a CMV equipped with a manual transmission. For the purposes of the skills test and the restriction, an automatic transmission includes any transmission not operating fully on the gear shift and clutch principle.

(K) - Intrastate only: If an applicant certifies their status as either Non-Excepted Intrastate or Excepted Intrastate, the state must indicate on the CDL, if issued, that person is restricted from operating a CMV in interstate commerce. States may impose this restriction for reasons other than those specified above.

(L) - No Air brake equipped CMV: If an applicant does not take or fails the air brake component of the knowledge test, or performs the skills test in a vehicle not equipped with air brakes, the State must indicate on the CLP or CDL, if issued, that the person is restricted from operating a CMV equipped with any type of air brakes. For the purposes of the skills test and the restriction, air brakes include any braking system operating fully or partially on the air brake principle.

(M) - No Class A passenger vehicle: If an applicant applying for a passenger endorsement performs the skills test in a passenger vehicle requiring a Group B CDL, the State must indicate on the CDL, if issued, that the person is restricted from operating a passenger vehicle requiring a Group A CDL.

(N) - No Class A and B passenger vehicle: If an applicant applying for a passenger endorsement performs the skills test in a passenger vehicle requiring a Group C CDL, the State must indicate on the CDL, if issued, that the person is restricted from operating a passenger vehicle requiring a Group A or B CDL

(O) - No tractor trailer CMV: If an applicant performs the skills test in a combination vehicle for a Group A CDL with the power unit and towed unit connected with a pintle hook or other non-fifth wheel connection, the State must indicate on the CDL, if issued, that the person is restricted from operating a tractor-trailer combination connected by a fifth wheel that requires a Group A CDL.

*An applicant who passes a skills test using a combination vehicle that is NOT a **Truck Tractor Semi-Trailer** combination, but is otherwise equipped with a fifth wheel, will be issued a CDL with an "O" restriction.*

(P) - No passengers in CMV bus: A CLP holder with a P endorsement is prohibited from operating a CMV carrying passengers, other than Federal/State auditors and inspectors, test examiners, other trainees, and the CDL holder accompanying the CLP holder as prescribed by § CFR 383.25(a)(1) of this part.

A CLP holder with a S endorsement is prohibited from operating a school bus with passengers, other than Federal/State auditors and inspectors, test examiners, other trainees, and the CDL holder accompanying the CLP holder as prescribed by § CFR 383.25(a)(1) of this part.

(V) - Medical Variance: If the State is notified according to § 383.73(o)(3) that the driver has been issued a medical variance, the State must indicate the existence of such a medical variance on the CDLIS driver record and the CDL document, if issued, using the restriction code "V" to indicate there is information about a medical variance on the CDLIS driver record.

(X) - No cargo in CMV tank vehicle: A CLP holder with an N endorsement may only operate an empty tank vehicle and is prohibited from operating any tank vehicle that previously contained hazardous materials that has not been purged of any residue.

(Z) - No full air brake equipped CMV: If an applicant performs the skills test in a vehicle equipped with air over hydraulic brakes, the State must indicate on the CDL, if issued, that the person is restricted from operating a CMV equipped with any braking system operating fully on the air brake principle. For the purposes of the skills test and the restriction, air over hydraulic brakes includes any braking system operating partially on the air brake and partially on the hydraulic brake principle.

Any additional jurisdictional restrictions that apply to the CLP driving privilege.

To Get a CDL or CLP

To get a CDL or CLP, you must pass knowledge and skills tests. This manual will help you pass the tests, however, it is not a substitute for a truck driver training class or program. Formal training is the most reliable way to learn the many special skills required for safely driving a large commercial vehicle and becoming a professional driver in the trucking industry. Figure 1.1 helps you determine if you need a CDL

Determining Class of CDL Required

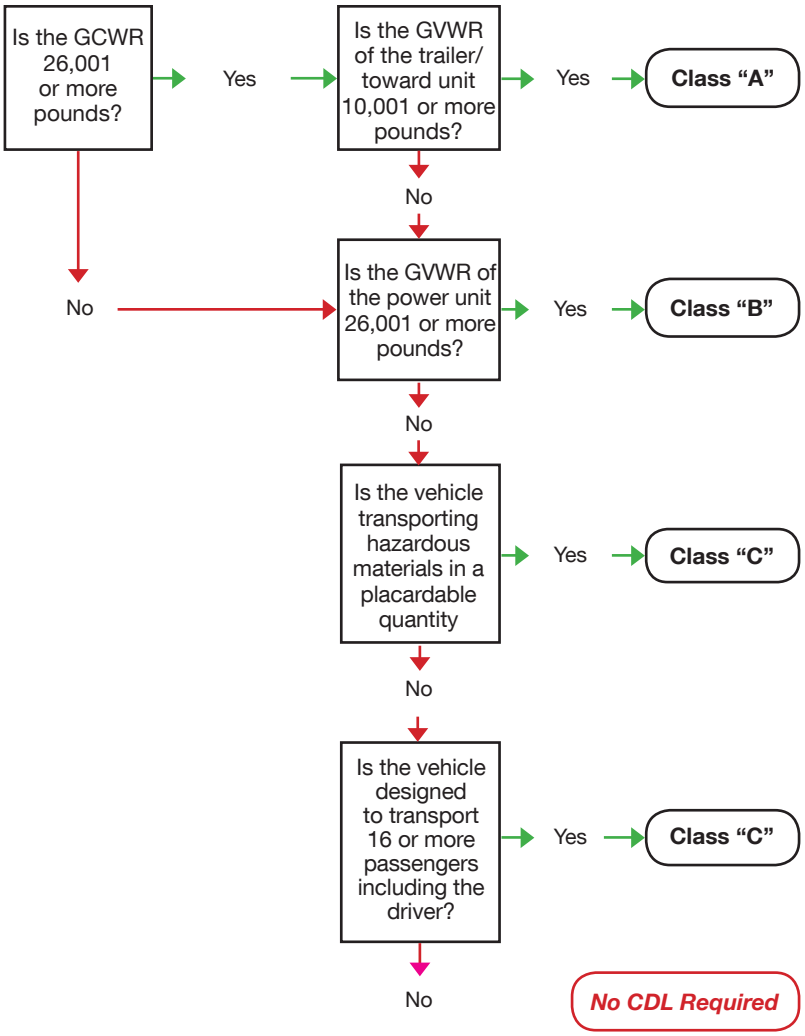

Gross combination weight rating (GCWR)
Means the value specified by the manufacturer of the power unit, if the value is displayed on the Federal Motor Vehicle Safety Standard (FMVSS) certification label; or the sum of the gross vehicle weight ratings (GVWRs) *or the gross vehicle weights (GVWs)* of the power unit and the towed unit(s), or any combination thereof, that produces the highest value.
(The underlined and italicized text above is for use by ***roadside enforcement only*** *for the purpose of determing whether the driver/vehicle is subject to CDL regulations.* ***It is not used to determine whether a vehicle is representative for the purposes of skills testing).***

Gross vehicle weight rating (GVWR) means the value specified by the manufacturer as the loaded weight of a single vehicle.

Figure 1.1

NOTE: A bus may be Class A, B, or C depending on whether the GVWR is over 26,001 pounds or is a combination vehicle.

1.1 – Commercial Driver License Tests

1.1.1 – Knowledge Tests

You will have to take one or more knowledge tests, depending on what class of license and what endorsements you need. The CDL knowledge tests include:

- The **general knowledge test**, taken by all applicants.
- The **passenger transport test**, taken by all bus driver applicants.
- The **air brakes test**, which you must take if your vehicle has air brakes, including air over hydraulic brakes.
- The **combination vehicles test**, which is required if you want to drive combination vehicles.
- The **hazardous materials test**, required if you want to haul hazardous materials as defined in 49 CFR 383.5. In order to obtain this endorsement you are also required to pass a Transportation Security Administration (TSA) background check.
- The **tank vehicle test**, required if you want to haul any liquid or gaseous materials in a tank or tanks having an individual rated capacity of more than 119 gallons and an aggregate rated capacity of 1,000 gallons or more that is either permanently or temporarily attached to the vehicle or chassis
- The **doubles/triples test**, required if you want to pull double or triple trailers.
- The **School Bus test**, required if you want to drive a school bus.

1.1.2 – Skills Tests

If you pass the required knowledge test(s), you can take the CDL skills tests. There are three types of general skills that will be tested: Vehicle inspection, basic vehicle control, and on-road driving. You must take these tests in the type of vehicle for which you wish to be licensed. Any vehicle that has components marked or labeled cannot be used for the Vehicle Inspection Test.

Vehicle Inspection. You will be tested to see if you know whether your vehicle is safe to drive. You will be asked to do a Vehicle inspection of your vehicle and explain to the examiner what you would inspect and why.

Basic Vehicle Control. You will be tested on your skill to control the vehicle. You will be asked to move your vehicle forward, backward, and turn it within a defined area. These areas may be marked with traffic lanes, cones, barriers, or something similar. The examiner will tell you how each control test is to be done.

On-road Test. You will be tested on your skill to safely drive your vehicle in a variety of traffic situations. The situations may include left and right turns, intersections, railroad crossings, curves, up and down grades, single or multi-lane roads, streets, or highways. The examiner will tell you where to drive.

Figure 1.2 details which sections of this manual you should study for each particular class of license and for each endorsement.

What Sections Should You Study?

		LICENSE TYPE			ENDORSEMENT				
		Class A	Class A	Class A	Hazardous Materials	Double / Triple	Tank Vehicles	Passenger	School Bus
Sections to Study	1	X	X	X					
	2	X	X	X		X	X	X	
	3	X	X	X					
	4							X	
	5*	X	X	X		X			
	6	X				X	X		
	7					X			
	8						X		
	9				X		X		
	10								X
	11	X	X	X				X	X
	12	X	X	X				X	X
	13	X	X	X				X	X

* Study section 5 if you plan to operate vehicles equipped with air brakes.

Figure 1.2 – What to Study

1.2 – Medical Documentation Requirements

Starting January 30, 2012 and no later than January 30, 2014, if you are applying for a CDL Permit; or are renewing, upgrading, adding endorsements to a CDL; or transferring a CDL from another state, you are required to provide information to your State Driver's License Agency (SDLA) regarding the type of commercial motor vehicle operation you drive in or expect to drive in with your CDL. Drivers operating in certain types of commerce will be required to submit a current medical examiner's certificate and/or any medical variance documents that you have been issued (i.e. Vision, Skills Performance or Diabetic waivers, or other exemptions) to your SDLA to obtain a "certified" medical status as part of your driving record. You must contact your State Driver Licensing Agency (SDLA) to obtain information regarding the requirement for submitting these documents.

If you are required to have a "certified" medical status and fail to provide and keep up-to-date your medical examiner's certificate you become "not-certified" and may lose your CDL.

For the purpose of complying with the new requirements for medical certification, it is important to know how you are using the CMV. The following information will help you decide how to self-certify:

1.2.1 – Interstate or Intrastate Commerce

Do you, or will you, use a CDL to operate a CMV in **interstate** or **intrastate commerce**?

Interstate commerce is when you drive a CMV:

- From one State to another State or a foreign country;
- Between two places within a State, but during part of the trip, the CMV crosses into another State or foreign country; or
- Between two places within a State, but the cargo or passengers are part of a trip that began or will end in another State or foreign country.

Intrastate commerce is when you drive a CMV within a State and you do not meet any of the descriptions above for interstate commerce.

If you operate in both **intrastate commerce** and **interstate commerce**, you must choose **interstate commerce**.

1.2.2 – Inter/Intrastate Commerce: Status Non-excepted or Excepted?

Once you decide whether you will operate in **interstate commerce** or **intrastate commerce**, you must decide whether you will operate (or expect to operate) in a **non-excepted** or **excepted** status. This decision will tell you to which of the four types of commerce you must self-certify.

Interstate Commerce:

You operate in **excepted interstate commerce** when you drive a CMV in interstate commerce only for the following excepted activities:

- To transport school children and/or school staff between home and school;
- As Federal, State or local government employees;
- To transport human corpses or sick or injured persons;
- Fire truck or rescue vehicle drivers during emergencies and other related activities;
- Primarily in the transportation of propane winter heating fuel when responding to an emergency condition requiring immediate response such as damage to a propane gas system after a storm or flooding;
- In Response to a pipeline emergency condition requiring immediate response such as a pipeline leak or rupture;
- In custom harvesting on a farm or to transport farm machinery and supplies used in the custom harvesting operation to and from a farm or to transport custom harvested crops to storage or market;
- Beekeeper in the seasonal transportation of bees;
- Controlled and operated by a farmer, but is not a combination vehicle (power unit and towed unit), and is used to transport agricultural products, farm machinery or farm supplies (no placardable hazardous materials) to and from a farm and within 150 air-miles of the farm;
- As a private motor carrier of passengers for non-business purposes; **or**
- To transport migrant workers.

If you answered yes to one or more of the above activities as the **only** operation in which you drive, you operate in **excepted interstate commerce** and do not need a Federal medical examiner's certificate.

If you answered no to all of the above activities, you operate in **non-excepted interstate commerce** and are required to provide a current medical examiner's certificate (49 CFR 391.45),commonly referred to as a medical certificate or DOT card, to your State Driver Licensing Agency (SDLA). Most CDL holders who drive CMVs in interstate commerce are **non-excepted interstate commerce** drivers.

If you operate in both **excepted interstate commerce** and **non-excepted interstate commerce**, you must choose **non-excepted interstate commerce** to be qualified to operate in both types of interstate commerce.

Intrastate Commerce:

You operate in **excepted Intrastate commerce** when you drive a CMV only in intrastate commerce activities for which your State of licensure has determined do not require you to meet the State's medical certification requirements. (contact your SDLA about their requirements).

You operate in **non-excepted intrastate commerce** when you drive a CMV only in intrastate commerce and are required to meet your State of licensure's medical certification requirements (contact your SDLA about their requirements).

If you operate in both **excepted intrastate commerce** and **non-excepted intrastate commerce**, you must choose **non-excepted intrastate commerce**.

1.2.3 – Self-Certification Statements

When completing an application for your CDL, you will be required to check the box next to the statement that describes your status. The actual statements on your application may vary from those shown below:

- ☐ Interstate non-excepted: I certify that I operate or expect to operate in interstate commerce, that I am subject to and meet the Federal DOT medical card requirements under 49 CFR part 391; and that I am required to obtain a medical examiner's certificate.
- ☐ Interstate excepted: I certify that I operate or expect to operate in interstate commerce, but engage exclusively in transportation or operations excepted under 49 CFR §§390.3(f), 391.2, 391.68 or 398.3 from all or parts of the qualification requirements of 49 CFR part 391; and that I am not required to obtain a medical examiner's certificate.
- ☐ Intrastate non-excepted: I certify that I operate or expect to operate entirely in intrastate commerce, that I am subject to and meet the medical requirements for my State; and that I am required to obtain a medical examiner's certificate.
- ☐ Intrastate excepted: I certify that I operate or expect to operate entirely in intrastate commerce, that I am not subject to the medical requirements for my State; and that I am not required to obtain a medical examiner's certificate.

1.3 - CDL Disqualifications

1.3.1 – General

You may not drive a commercial motor vehicle if you are disqualified for any reason.

1.3.2 – Alcohol, Leaving the Scene of an Accident, and Commission of a Felony

It is illegal to operate a CMV if your blood alcohol concentration (BAC) is .04% or more. If you operate a CMV, you shall be deemed to have given your consent to alcohol testing.

You will lose your CDL for at least one year for a first offense for:

- Driving a CMV if your blood alcohol concentration is .04% or higher.
- Driving a CMV under the influence of alcohol.
- Refusing to undergo blood alcohol testing.
- Driving a CMV while under the influence of a controlled substance.
- Leaving the scene of an accident involving a CMV.
- Committing a felony involving the use of a CMV.
- Driving a CMV when the CDL is suspended.
- Causing a fatality through negligent operation of a CMV.

You will lose your CDL for at least three years if the offense occurs while you are operating a CMV that is placarded for hazardous materials.

You will lose your CDL for life for a second offense.

You will lose your CDL for life if you use a CMV to commit a felony involving controlled substances.

You will be put out-of-service for 24 hours if you have any detectable amount of alcohol under .04%.

1.3.3 – Serious Traffic Violations

Serious traffic violations are excessive speeding (15 mph or more above the posted limit), reckless driving, improper or erratic lane changes, following a vehicle too closely, traffic offenses committed in a CMV in connection with fatal traffic accidents, driving a CMV without obtaining a CDL or having a CDL in the driver's possession, and driving a CMV without the proper class of CDL and/or endorsements.

You will lose your CDL:

- For at least 60 days if you have committed two serious traffic violations within a three-year period involving a CMV.
- For at least 120 days for three or more serious traffic violations within a three-year period involving a CMV.

1.3.4 – Violation of Out-of-Service Orders

You will lose your CDL:

- For at least 90 days if you have committed your first violation of an out-of-service order.
- For at least one year if you have committed two violations of an out-of-service order in a ten-year period.
- [For at least three years if you have committed three or more violations of an out-of-service order in a ten-year period].

1.3.5 – Railroad-highway Grade Crossing Violations

You will lose your CDL:

- For at least 60 days for your first violation.
- For at least 120 days for your second violation within a three-year period.
- For at least one year for your third violation within a three-year period.

These violations include violation of a federal, state or local law or regulation pertaining to one of the following six offenses at a railroad-highway grade crossing:

- For drivers who are not required to always stop, failing to stop before reaching the crossing if the tracks are not clear.
- For drivers who are not required to always stop, failing to slow down and check that the tracks are clear of an approaching train.
- For drivers who are always required to stop, failing to stop before driving onto the crossing.
- For all drivers failing to have sufficient space to drive completely through the crossing without stopping.
- For all drivers failing to obey a traffic control device or the directions of an enforcement official at the crossing.
- For all drivers failing to negotiate a crossing because of insufficient undercarriage clearance.

1.3.6 – Hazardous Materials Endorsement Background Check and Disqualifications

If you require a hazardous materials endorsement you will be required to submit your fingerprints and be subject to a background check.

You will be denied or you will lose your hazardous materials endorsement if you:

- Are not a lawful permanent resident of the United States.
- Renounce your United States citizenship.
- Are wanted or under indictment for certain felonies.
- Have a conviction in military or civilian court for certain felonies.
- Have been adjudicated as lacking mental capacity or have been involuntarily committed to a mental health facility as specified in 49 CFR §1572.109.
- Are considered to pose a security threat as determined by the Transportation Security Administration.

The background check procedures vary from jurisdiction to jurisdiction. Your licensing agency will provide you with all the information you need to complete the required TSA background check procedures.

1.3.7 – Traffic Violations in Your Personal Vehicle

The Motor Carrier Safety Improvement Act (MCSIA) of 1999 requires a CDL holder to be disqualified from operating a commercial motor vehicle if the CDL holder has been convicted of certain types of moving violations in their personal vehicle.

- If your privilege to operate your personal vehicle is revoked, cancelled, or suspended due to violations of traffic control laws (other than parking violations) you will also lose your CDL driving privileges.
- If your privilege to operate your personal vehicle is revoked, cancelled, or suspended due to alcohol, controlled substance or felony violations, you will lose your CDL for 1 year. If you are convicted of a second violation in your personal vehicle or CMV you will lose your CDL for life.

- If your license to operate your personal vehicle is revoked, cancelled, or suspended you may not obtain a "hardship" license to operate a CMV.

1.4 – Other CDL Rules

There are other federal and state rules that affect drivers operating CMVs in all states. Among them are:

- You cannot have more than one license. If you break this rule, a court may fine you up to $5,000 or put you in jail and keep your home state license and return any others.
- You must notify your employer within 30 days of conviction for any traffic violations (except parking). This is true no matter what type of vehicle you were driving.
- You must notify your motor vehicle licensing agency within 30 days if you are convicted in any other jurisdiction of any traffic violation (except parking). This is true no matter what type of vehicle you were driving.
- You must notify your employer within two business days if your license is suspended, revoked, or canceled, or if you are disqualified from driving.
- You must give your employer information on all driving jobs you have held for the past 10 years. You must do this when you apply for a commercial driving job.
- No one can drive a commercial motor vehicle without a CDL. A court may fine you up to $5,000 or put you in jail for breaking this rule.
- If you have a hazardous materials endorsement you must notify and surrender your hazardous materials endorsement to the state that issued your CDL within 24 hours of any conviction or indictment in any jurisdiction, civilian or military, for, or found not guilty by reason of insanity of a disqualifying crime listed in 49 CFR 1572.103; who is adjudicated as lacking mental capacity or have been involuntarily committed to a mental institution as specified in 49 CFR 1572.109; or who renounces his or her U. S. citizenship;
- Your employer may not let you drive a commercial motor vehicle if you have more than one license or if you're CDL is suspended or revoked. A court may fine the employer up to $5,000 or put him/her in jail for breaking this rule.
- All states are connected to one computerized system to share information about CDL drivers. The states will check on drivers' accident records to be sure that drivers do not have more than one CDL.
- You are not allowed to hold a mobile telephone to conduct a voice communication or dial a mobile telephone by pressing more than a single button when driving.
- You are not allowed to send or read text messages while driving.
- You must be properly restrained by a safety belt at all times while operating a commercial motor vehicle. The safety belt design holds the driver securely behind the wheel during a crash, helping the driver to control the vehicle and reduces the chance of serious injury or death. If you do not wear a safety belt, you are four times more likely to be fatally injured if you are thrown from the vehicle.

Your state may have additional rules that you must also obey.

1.5 – International Registration Plan International Fuel Tax Agreement

If you operate a CDL required vehicle in interstate commerce, the vehicle, with few exceptions, is required to be registered under the International Registration Plan (IRP) and the International Fuel Tax Agreement (IFTA). These federally mandated programs provide for the equitable collection and distribution of vehicle license fees and motor fuels taxes for vehicles traveling throughout the 48 contiguous United States and 10 Canadian provinces.

Under the IRP, jurisdictions must register apportioned vehicles which includes issuing license plates and cab cards or proper credentials, calculate, collect and distribute IRP fees, audit carriers for accuracy of reported distance and fees and enforce IRP requirements.

Registrant responsibilities under the Plan include applying for IRP registration with base jurisdiction, providing proper documentation for registration, paying appropriate IRP registration fees, properly displaying registration credentials, maintaining accurate distance records, and making records available for jurisdiction review.

The basic concept behind IFTA is to allow a licensee (motor carrier) to license in a base jurisdiction for the reporting and payment of motor fuel use taxes.

Under the IFTA, a licensee is issued one set of credentials which will authorize operations through all IFTA member jurisdictions. The fuel use taxes collected pursuant to the IFTA are calculated based on the number of miles (kilometers) traveled and the number of gallons (liters) consumed in the member jurisdictions. The licensee files one

quarterly tax return with the base jurisdiction by which the licensee will report all operations through all IFTA member jurisdictions.

It is the base jurisdiction's responsibility to remit the taxes collected to other member jurisdictions and to represent the other member jurisdictions in the tax collection process, including the performance of audits.

An IFTA licensee must retain records to support the information reported on the IFTA quarterly tax return.

The IRP registrant and the IFTA licensee may be the vehicle owner or the vehicle operator.

The requirement for acquiring IRP plates for a vehicle and IFTA license for a motor carrier is determined by the definitions from the IRP Plan and the IFTA for Qualified Vehicle and Qualified Motor Vehicle:

For purposes of IRP:

A Qualified Vehicle is (except as provided below) any Power Unit that is used or

intended for use in two or more Member Jurisdictions and that is used for the transportation of persons for hire or designed, used, or maintained primarily for the transportation of property, and:

(i) has two Axles and a gross Vehicle weight or registered gross Vehicle weight in
(ii) excess of 26,000 pounds (11,793.401 kilograms), or
(iii) has three or more Axles, regardless of weight, or
(iv) is used in combination, when the gross Vehicle weight of such combination exceeds 26,000 pounds (11,793.401 kilograms).

While similar, the Qualified Motor Vehicle in IFTA means a motor vehicle used, designed, or maintained for transportation of persons or property and:

1) Having two axles and a gross vehicle weight or registered gross vehicle weight exceeding 26,000 pounds or 11,797 kilograms; or
2) Is used in combination, when the weight of such combination exceeds 26,000 pounds or 11,797 kilograms gross vehicle or registered gross vehicle weight. Qualified Motor Vehicle does not include recreational vehicles.

If the vehicle you operate is registered under IRP and you are a motor carrier licensed under IFTA, then you are required to comply with the mandatory record keeping requirements for operating the vehicle. A universally accepted method of capturing this information is through the completion of an Individual Vehicle Distance Record (IVDR), sometimes times referred to as a Driver Trip Report. This document reflects the distance traveled and fuel purchased for a vehicle that operates interstate under apportioned (IRP) registration and IFTA fuel tax credentials.

Although the actual format of the IVDR may vary, the information that is required for proper record keeping does not.

In order to satisfy the requirements for Individual Vehicle Distance Records, these documents must include the following information:

Distance

Per Article IV of the IRP Plan
(i) Date of trip (starting and ending)
(ii) Trip origin and destination – City and State or Province
(iii) Route(s) of travel
(iv) Beginning and ending odometer or hubometer reading of the trip
(v) Total distance traveled
(vi) In-Jurisdiction distance
(vii) Power unit number or vehicle identification number.

Fuel

Per Section P560 of the IFTA Procedures Manual
.300 An acceptable receipt or invoice must include, but shall not be limited to, the following:
.005 Date of purchase
.010 Seller's name and address
.015 Number of gallons or liters purchased;
.020 Fuel type
.025 Price per gallon or liter or total amount of sale
.030 Unit number or other unique vehicle identifier
.035 Purchaser's name

An example of an IVDR that must be completed in its entirety for each trip can be found in **Figure 1** below. Each individual IVDR should be filled out for only one vehicle. The rules to follow when trying to determine how and when to log an odometer reading are the following:

- At the beginning of the day
- When leaving the state or province
- At the end of the trip/day

Not only do the trips need to be logged, but the fuel purchases need to be documented as well. You must obtain a receipt for all fueling and include it with your completed IVDR.

Make sure that any trips that you enter are always filled out in descending order and that your trips include all state/provinces that you traveled through on your route.

There are different routes that a driver may take, and most of the miles may be within one state or province. Whether or not the distance you travel is primarily in one jurisdiction or spread among several jurisdictions, all information for the trip must be recorded. This includes the dates, the routes, odometer readings and fuel purchases. By completing this document in full and keeping all records required by both the IRP and the IFTA, you will have ensured that you and your company are in compliance with all State and Provincial laws surrounding fuel and distance record keeping requirements.

The IVDR serves as the source document for the calculation of fees and taxes that are payable to the jurisdictions in which the vehicle is operated, so these original records must be maintained for a minimum of four years.

In addition, these records are subject to audit by the taxing jurisdictions. Failure to maintain complete and accurate records could result in fines, penalties and suspension or revocation of IRP registrations and IFTA licenses.

For additional information on the IRP and the requirements related to the IRP, contact your base jurisdiction motor vehicle department or IRP, Inc. the official repository for the IRP. Additional information can be found on the IRP, Inc. website at www.irponline.org. There is a training video on the website home page available in English, Spanish and French

For additional information on IFTA and the requirements related to IFTA, contact the appropriate agency in your base jurisdiction. You will also find useful information about the Agreement at the official repository of IFTA at http://www.iftach.org/index.php.

Figure 1 – Individual Vehicle Mileage & Fuel Record (Example)

Individual Vehicle Mileage And Fuel Record

Carrier	ABC Carriers Inc	Account Number	999999999	Driver Name	John Doe Jr.	Unit Number	58
Load Information	1/2/04 Pick Up Maplewood MO Origins: 1/3/04 Pick Up Springfield IL		Destinations:	1/2/04 Delivery Springfield IL 1/03/04 Delivery Dayton OH	Driver Comments		
Date	Town Origin-Jurisdiction Lines-Town Destination	State	Ending Odometer	Miles by Jurisdiction	Highways or Routes Traveled	Name of Fuel Stop and Location	Gallons Purchased
1/2/2004	Beginning State & Odometer Reading	MO	45,869	All other odometer reading will be ending readings.			
	Maplewood MO - IL Line	MO	45,878	9	64		
	MO Line - Springfield IL	IL	45,976	98	55-29	Ted's I-72 Fuel — Springfield IL	98
1/3/2004	Springfield IL - IN Line	IL	46,101	125	29-97-72-57-74		
	IN Line - OH Line	IN	46,259	158	74-32-65-465-70		
	OH Line - Dayton OH	OH	46,297	38	70-49		
			Total Trip Miles **	428		Total Fuel Purchases	98

Odometer Miles, Total Trip Miles & Total Jurisdictional Miles Must Agree		→	Total Jurisdictional Miles **		←
			Jurisdiction	Miles	Jurisdiction / Miles
Ending Odometer	46,297	OFFICE USE	MO	9	OFFICE USE ONLY
Beginning Odometer	45,869	→	IL	223	
Total Odometer Miles **	428		IN	158	←
			OH	38	

Note: Beginning odometer reading on this trip must match ending reading from prior trip and ending reading from this trip must be the beginning reading on the next trip.

Example

Section 2
DRIVING SAFELY

This Section Covers

- **Vehicle Inspection**
- **Basic Control of Your Vehicle**
- **Shifting Gears**
- **Seeing**
- **Communicating**
- **Space Management**
- **Controlling Your Speed**
- **Seeing Hazards**
- **Distracted Driving**
- **Aggressive Drivers/Road Rage**
- **Night Driving & Driver Fatigue**
- **Driving in Fog**
- **Winter Driving**
- **Hot Weather Driving**
- **Railroad-highway Crossings**
- **Mountain Driving**
- **Driving Emergencies**
- **Antilock Braking Systems**
- **Skid Control and Recovery**
- **Accident Procedures**
- **Fires**
- **Alcohol, Other Drugs, and Driving**
- **Hazardous Materials Rules**

This section contains knowledge and safe driving information that all commercial drivers should know. You must pass a test on this information to get a CDL. This section does not have specific information on air brakes, combination vehicles, doubles, or passenger vehicles. When preparing for the Vehicle Inspection Test, you must review the material in Section 11 in addition to the information in this section. This section does have basic information on hazardous materials (HazMat) that all drivers should know. If you need a HazMat endorsement, you should study Section 9.

2.1 – Vehicle Inspection

2.1.1 – Why Inspect

Safety is the most important reason you inspect your vehicle, safety for yourself and for other road users.

A vehicle defect found during an inspection could save you problems later. You could have a breakdown on the road that will cost time and dollars, or even worse, a crash caused by the defect.

Federal and state laws require that drivers inspect their vehicles. Federal and state inspectors also may inspect your vehicles. If they judge the vehicle to be unsafe, they will put it "out of service" until it is fixed.

2.1.2 – Types of Vehicle Inspection

Vehicle Inspection. A Vehicle inspection will help you find problems that could cause a crash or breakdown.

During a Trip. For safety you should:

Watch gauges for signs of trouble.

Use your senses to check for problems (look, listen, smell, feel).

Check critical items when you stop:

- Tires, wheels and rims.
- Brakes.
- Lights and reflectors.
- Brake and electrical connections to trailer.
- Trailer coupling devices.
- Cargo securement devices.

After-trip Inspection and Report. You should do an after-trip inspection at the end of the trip, day, or tour of duty on each vehicle you operated. It may include filling out a vehicle condition report listing any problems you find. The inspection report helps a motor carrier know when the vehicle needs repairs.

2.1.3 – What to Look For

Tire Problems

- Too much or too little air pressure.
- Bad wear. You need at least 4/32-inch tread depth in every major groove on front tires. You need 2/32 inch on other tires. No fabric should show through the tread or sidewall.
- Cuts or other damage.
- Tread separation.
- Dual tires that come in contact with each other or parts of the vehicle.

- Mismatched sizes.
- Radial and bias-ply tires used together.
- Cut or cracked valve stems.
- Re-grooved, recapped, or retreaded tires on the front wheels of a bus are prohibited.

Wheel and Rim Problems

- Damaged rims.
- Rust around wheel nuts may mean the nuts are loose--check tightness. After a tire has been changed, stop a short while later and re-check tightness of nuts.
- Missing clamps, spacers, studs, or lugs means danger.
- Mismatched, bent, or cracked lock rings are dangerous.
- Wheels or rims that have had welding repairs are not safe.

Bad Brake Drums or Shoes

- Cracked drums.
- Shoes or pads with oil, grease, or brake fluid on them.
- Shoes worn dangerously thin, missing, or broken.

Steering System Defects

- Missing nuts, bolts, cotter keys, or other parts.
- Bent, loose, or broken parts, such as steering column, steering gear box, or tie rods.
- If power steering equipped, check hoses, pumps, and fluid level; check for leaks.
- Steering wheel play of more than 10 degrees (approximately 2 inches movement at the rim of a 20-inch steering wheel) can make it hard to steer.

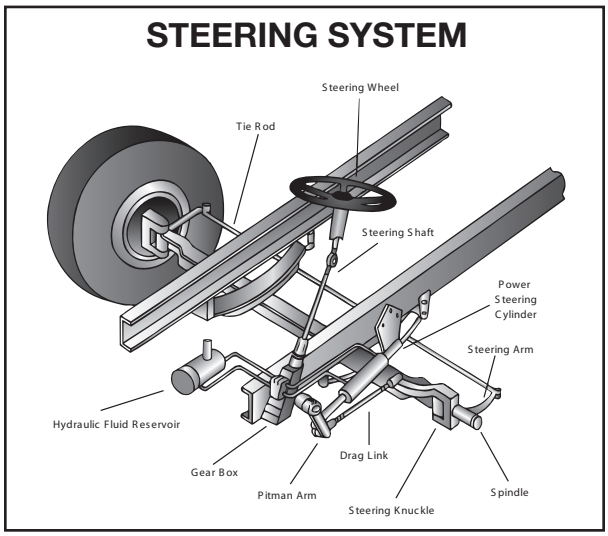

Figure 2.1

Suspension System Defects. The suspension system holds up the vehicle and its load. It keeps the axles in place. Therefore, broken suspension parts can be extremely dangerous. Look for:

- Spring hangers that allow movement of axle from proper position. See Figure 2.2.

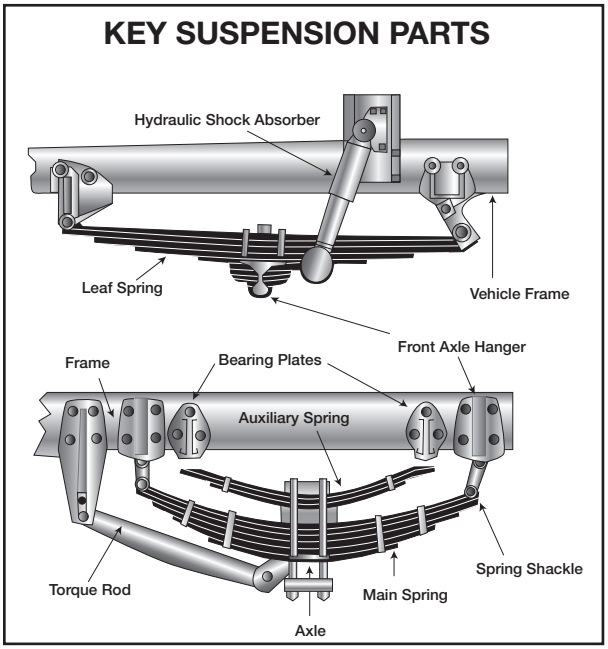

Figure 2.2

- Cracked or broken spring hangers.
- Missing or broken leaves in any leaf spring. If one-fourth or more are missing, it will put the vehicle "out of service", but any defect could be dangerous. See Figure 2.3.

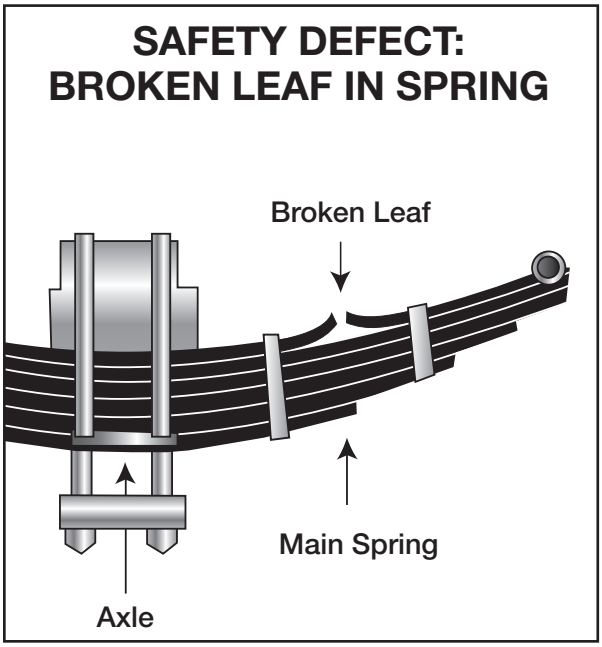

Figure 2.3

- Broken leaves in a multi-leaf spring or leaves that have shifted so they might hit a tire or other part.
- Leaking shock absorbers.
- Torque rod or arm, u-bolts, spring hangers, or other axle positioning parts that are cracked, damaged, or missing.
- Air suspension systems that are damaged and/or leaking. See Figure 2.4.

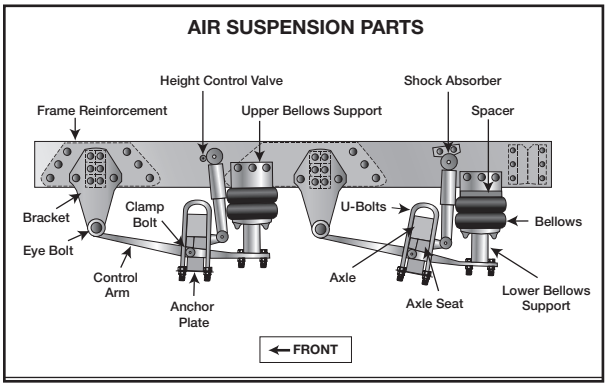

Figure 2.4

- Any loose, cracked, broken, or missing frame members.

Exhaust System Defects. A broken exhaust system can let poison fumes into the cab or sleeper berth. Look for:

- Loose, broken, or missing exhaust pipes, mufflers, tailpipes, or vertical stacks.
- Loose, broken, or missing mounting brackets, clamps, bolts, or nuts.
- Exhaust system parts rubbing against fuel system parts, tires, or other moving parts of vehicle.
- Exhaust system parts that are leaking.

Emergency Equipment. Vehicles must be equipped with emergency equipment. Look for:

- Fire extinguisher(s).
- Spare electrical fuses (unless equipped with circuit breakers).
- Warning devices for parked vehicles: three reflective triangles or at least 6 fusees or 3 liquid burning flares).

Cargo (Trucks). You must make sure the truck is not overloaded and the cargo is balanced and secured before each trip. If the cargo contains hazardous materials, you must inspect for proper papers and placarding.

2.1.4 – CDL Vehicle Inspection Test

In order to obtain a CDL you will be required to pass a Vehicle inspection test. You will be tested to see if you know whether your vehicle is safe to drive. You will be asked to do a Vehicle inspection of your vehicle. You must point to/touch and name the item you are inspecting and explain to the examiner what you would inspect and why. The following seven-step inspection method should be useful.

2.1.5 – Seven-step Inspection Method

Method of Inspection. You should do a Vehicle inspection the same way each time so you will learn all the steps and be less likely to forget something.

Approaching the Vehicle. Notice general condition. Look for damage or vehicle leaning to one side. Look under the vehicle for fresh oil, coolant, grease, or fuel leaks. Check the area around the vehicle for hazards to vehicle movement (people, other vehicles, objects, low-hanging wires, limbs, etc.).

Vehicle Inspection Guide

Step 1: Vehicle Overview

Review Last Vehicle Inspection Report. Drivers may have to make a vehicle inspection report in writing each day. The motor carrier must repair any items in the report that affect safety and certify on the report that repairs were made or were unnecessary. You must sign the report only if defects were noted and certified to be repaired or not needed to be repaired.

Step 2: Check Engine Compartment

Check That the Parking Brakes Are On and/or Wheels Chocked.

You may have to raise the hood, tilt the cab (secure loose things so they don't fall and break something), or open the engine compartment door.

Check the following:

- Engine oil level.
- Coolant level in radiator; condition of hoses.
- Power steering fluid level; hose condition (if so equipped).
- Windshield washer fluid level.
- Battery fluid level, connections and tie downs (battery may be located elsewhere)
- Automatic transmission fluid level (may require engine to be running).
- Check belts for tightness and excessive wear (alternator, water pump, air compressor) -- learn how much "give" the belts should have when adjusted right, and check each one.

- Leaks in the engine compartment (fuel, coolant, oil, power steering fluid, hydraulic fluid, battery fluid).
- Cracked, worn electrical wiring insulation.
- Lower and secure hood, cab, or engine compartment door.

Step 3: Start Engine and Inspect Inside the Cab

Get In and Start Engine

- Make sure parking brake is on.
- Put gearshift in neutral (or "park" if automatic).
- Start engine; listen for unusual noises.
- If equipped, check the Anti-lock Braking System (ABS) indicator lights. Light on dash should come on and then turn off. If it stays on the ABS is not working properly. For trailers only, if the yellow light on the left rear of the trailer stays on, the ABS is not working properly.

Look at the Gauges

- Oil pressure. Should come up to normal within seconds after engine is started. See Figure 2.5
- Air pressure. Pressure should build from 50 to 90 psi within 3 minutes. Build air pressure to governor cut-out (usually around 120 – 140 psi. **Know your vehicle's requirements.**
- Ammeter and/or voltmeter. Should be in normal range(s).
- Coolant temperature. Should begin gradual rise to normal operating range.
- Engine oil temperature. Should begin gradual rise to normal operating range.
- Warning lights and buzzers. Oil, coolant, charging circuit warning, and antilock brake system lights should go out right away.

Check Condition of Controls. Check all of the following for looseness, sticking, damage, or improper setting:

- Steering wheel.
- Clutch.
- Accelerator ("gas pedal").
- Brake controls.
  - Foot brake.
  - Trailer brake (if vehicle has one).
  - Parking brake.
  - Retarder controls (if vehicle has them).
- Transmission controls.
- Interaxle differential lock (if vehicle has one).
- Horn(s).
- Windshield wiper/washer.
- Lights.
  - Headlights.
  - Dimmer switch.
  - Turn signal.
  - Four-way flashers.
  - Parking, clearance, identification, marker switch(es).

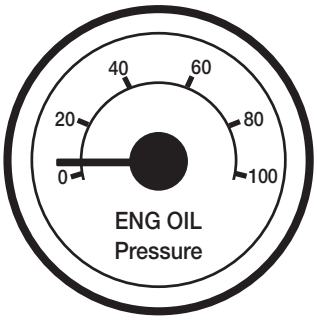

OIL PRESSURE

- Idling 5-20 PSI
- Operating 35-75 PSI
- Low, Dropping, Fluctuating: **STOP IMMEDIATELY!** Without oil the engine can be destroyed rapidly

Figure 2.5

Check Mirrors and Windshield. Inspect mirrors and windshield for cracks, dirt, illegal stickers, or other obstructions to seeing clearly. Clean and adjust as necessary.

Check Emergency Equipment

- Check for safety equipment:
  - Spare electrical fuses (unless vehicle has circuit breakers).
  - Three red reflective triangles, 6 fusees or 3 liquid burning flares.
  - Properly charged and rated fire extinguisher.
- Check for optional items such as:
  - Chains (where winter conditions require).
  - Tire changing equipment.
  - List of emergency phone numbers
  - Accident reporting kit (packet).

Check Safety Belt. Check that the safety belt is securely mounted, adjusts; latches properly and is not ripped or frayed.

Step 4: Turn Off Engine and Check Lights

Make sure the parking brake is set, turn off the engine, and take the key with you. Turn on headlights (low beams) and four-way emergency flashers, and get out of the vehicle.

Step 5: Do Walk-around Inspection

- Go to front of vehicle and check that low beams are on and both of the four-way flashers are working.
- Push dimmer switch and check that high beams work.
- Turn off headlights and four-way emergency flashers.
- Turn on parking, clearance, side-marker, and identification lights.
- Turn on right turn signal, and start walk-around inspection.

General

- Walk around and inspect.
- Clean all lights, reflectors, and glass as you go along.

Left Front Side

- Driver's door glass should be clean.
- Door latches or locks should work properly.
- Left front wheel.
  - ➢ Condition of wheel and rim--missing, bent, broken studs, clamps, lugs, or any signs of misalignment.
  - ➢ Condition of tires--properly inflated, valve stem and cap OK, no serious cuts, bulges, or tread wear.
  - ➢ Use wrench to test rust-streaked lug nuts, indicating looseness.
  - ➢ Hub oil level OK, no leaks.
- Left front suspension.
  - ➢ Condition of spring, spring hangers, shackles, u-bolts.
  - ➢ Shock absorber condition.
- Left front brake.
  - ➢ Condition of brake drum or disc.
  - ➢ Condition of hoses.

Front

- Condition of front axle.
- Condition of steering system.
  - ➢ No loose, worn, bent, damaged or missing parts.
  - ➢ Must grab steering mechanism to test for looseness.
- Condition of windshield.
  - ➢ Check for damage and clean if dirty.
  - ➢ Check windshield wiper arms for proper spring tension.
  - ➢ Check wiper blades for damage, "stiff" rubber, and securement.
- Lights and reflectors.
  - ➢ Parking, clearance, and identification lights clean, operating, and proper color (amber at front).
  - ➢ Reflectors clean and proper color (amber at front).
  - ➢ Right front turn signal light clean, operating, and proper color (amber or white on signals facing forward).

Right Side

- Right front: check all items as done on left front.
- Primary and secondary safety cab locks engaged (if cab-over-engine design).
- Right fuel tank(s).
  - ➢ Securely mounted, not damaged, or leaking.
  - ➢ Fuel crossover line secure.
  - ➢ Tank(s) contain enough fuel.
  - ➢ Cap(s) on and secure.
- Condition of visible parts.
  - ➢ Rear of engine--not leaking.
  - ➢ Transmission--not leaking.
  - ➢ Exhaust system--secure, not leaking, not touching wires, fuel, or air-lines.
  - ➢ Frame and cross members--no bends or cracks.
  - ➢ Air-lines and electrical wiring--secured against snagging, rubbing, wearing.
  - ➢ Spare tire carrier or rack not damaged (if so equipped).
  - ➢ Spare tire and/or wheel securely mounted in rack.
  - ➢ Spare tire and wheel adequate (proper size, properly inflated).
- Cargo securement (trucks).
  - ➢ Cargo properly blocked, braced, tied, chained, etc.
  - ➢ Header board adequate, secure (if required).
- Side boards, stakes strong enough, free of damage, properly set in place (if so equipped).
- Canvas or tarp (if required) properly secured to prevent tearing, billowing, or blocking of mirrors.
- If oversize, all required signs (flags, lamps, and reflectors) safely and properly mounted and all required permits in driver's possession.
- Curbside cargo compartment doors in good condition, securely closed, latched/locked and required security seals in place.

Right Rear

- Condition of wheels and rims--no missing, bent, or broken spacers, studs, clamps, or lugs.
- Condition of tires--properly inflated, valve stems and caps OK, no serious cuts, bulges, tread wear, tires not rubbing each other, and nothing stuck between them.
- Tires same type, e.g., not mixed radial and bias types.
- Tires evenly matched (same sizes).
- Wheel bearing/seals not leaking.
- Suspension.
  - Condition of spring(s), spring hangers, shackles, and u-bolts.
  - Axle secure.
  - Powered axle(s) not leaking lube (gear oil).
  - Condition of torque rod arms, bushings.
  - Condition of shock absorber(s).
  - If retractable axle equipped, check condition of lift mechanism. If air powered, check for leaks.
  - Condition of air ride components.
- Brakes.
  - Brake adjustment.
  - Condition of brake drum(s) or discs.
  - Condition of hoses--look for any wear due to rubbing.
- Lights and reflectors.
  - Side-marker lights clean, operating, and proper color (red at rear, others amber).
  - Side-marker reflectors clean and proper color (red at rear, others amber).

Rear

- Lights and reflectors.
  - Rear clearance and identification lights clean, operating, and proper color (red at rear).
  - Reflectors clean and proper color (red at rear).
  - Taillights clean, operating, and proper color (red at rear).
  - Right rear turn signal operating, and proper color (red, yellow, or amber at rear).
- License plate(s) present, clean, and secured.
- Splash guards present, not damaged, properly fastened, not dragging on ground, or rubbing tires.
- Cargo secure (trucks).
- Cargo properly blocked, braced, tied, chained, etc.
- Tailboards up and properly secured.
- End gates free of damage, properly secured in stake sockets.
- Canvas or tarp (if required) properly secured to prevent tearing, billowing, or blocking of either the rearview mirrors or rear lights.
- If over-length, or over-width, make sure all signs and/or additional lights/flags are safely and properly mounted and all required permits are in driver's possession.
- Rear doors securely closed, latched/locked.

Left Side

- Check all items as done on right side, plus:
  - Battery(ies) (if not mounted in engine compartment).
  - Battery box(es) securely mounted to vehicle.
  - Box has secure cover.
  - Battery(ies) secured against movement.
  - Battery(ies) not broken or leaking.
  - Fluid in battery(ies) at proper level (except maintenance-free type).
  - Cell caps present and securely tightened (except maintenance-free type).
  - Vents in cell caps free of foreign material (except maintenance-free type).

Step 6: Check Signal Lights

Get In and Turn Off Lights
- Turn off all lights.
- Turn on stop lights (apply trailer hand brake or have a helper put on the brake pedal).
- Turn on left turn signal lights.

Get Out and Check Lights
- Left front turn signal light clean, operating and proper color (amber or white on signals facing the front).
- Left rear turn signal light and both stop lights clean, operating, and proper color (red, yellow, or amber).

Get In Vehicle

- Turn off lights not needed for driving.
- Check for all required papers, trip manifests, permits, etc.
- Secure all loose articles in cab (they might interfere with operation of the controls or hit you in a crash).
- Start the engine.

Step 7: Start the Engine and Check

Test for Hydraulic Leaks. If the vehicle has hydraulic brakes, pump the brake pedal three times. Then apply firm pressure to the pedal and hold for five seconds. The pedal should not move. If it does, there may be a leak or other problem. Get it fixed before driving. If the vehicle has air brakes, do the checks described in Sections 5 and 6 of this manual.

Brake System

Test Parking Brake(s)

- Fasten safety belt
- Set parking brake (power unit only).
- Release trailer parking brake (if applicable).
- Place vehicle into a low gear.
- Gently pull forward against parking brake to make sure the parking brake holds.
- Repeat the same steps for the trailer with trailer parking brake set and power unit parking brakes released (if applicable).
- If it doesn't hold vehicle, it is faulty; get it fixed.

Test Service Brake Stopping Action

- Go about five miles per hour.
- Push brake pedal firmly
- "Pulling" to one side or the other can mean brake trouble.
- Any unusual brake pedal "feel" or delayed stopping action can mean trouble.
- If you find anything unsafe during the Vehicle inspection, get it fixed. Federal and state laws forbid operating an unsafe vehicle.

2.1.6 – Inspection during a Trip

Check Vehicle Operation Regularly

You should check:

- Instruments.
- Air pressure gauge (if you have air brakes).
- Temperature gauges.
- Pressure gauges.
- Ammeter/voltmeter.
- Mirrors.
- Tires.
- Cargo, cargo covers.
- Lights, etc

If you see, hear, smell, or feel anything that might mean trouble, check it out.

Safety Inspection. Drivers of trucks and truck tractors when transporting cargo must inspect the securement of the cargo within the first 50 miles of a trip and every 150 miles or every three hours (whichever comes first) after.

2.1.7 – After-trip Inspection and Report

You may have to make a written report each day on the condition of the vehicle(s) you drove. Report anything affecting safety or possibly leading to mechanical breakdown.

Subsection 2.1

Test Your Knowledge

The vehicle inspection report tells the motor carrier about problems that may need fixing. Keep a copy of your report in the vehicle for one day. That way, the next driver can learn about any problems you have found.

1. What is the most important reason for doing a vehicle inspection?
2. What things should you check during a trip?
3. Name some key steering system parts.
4. Name some suspension system defects.
5. What three kinds of emergency equipment must you have?
6. What is the minimum tread depth for front tires? For other tires?
7. Name some things you should check on the front of your vehicle during the walk around inspection.
8. What should wheel bearing seals be checked for?
9. How many red reflective triangles should you carry?
10. How do you test hydraulic brakes for leaks?
11. Why put the starter switch key in your pocket during the Vehicle inspection?

These questions may be on your test. If you can't answer them all, re-read subsection 2.1.

2.2 – Basic Control of Your Vehicle

To drive a vehicle safely, you must be able to control its speed and direction. Safe operation of a commercial vehicle requires skill in:

- Accelerating.
- Steering.
- Stopping.
- Backing safely.

Fasten your seatbelt when on the road. Apply the parking brake when you leave your vehicle.

2.2.1 – Accelerating

Don't roll back when you start. You may hit someone behind you. If you have a manual transmission vehicle, partly engage the clutch before you take your right foot off the brake. Put on the parking brake whenever necessary to keep from rolling back. Release the parking brake only when you have applied enough engine power to keep from

rolling back. On a tractor-trailer equipped with a trailer brake hand valve, the hand valve can be applied to keep from rolling back.

Speed up smoothly and gradually so the vehicle does not jerk. Rough acceleration can cause mechanical damage. When pulling a trailer, rough acceleration can damage the coupling.

Speed up very gradually when traction is poor, as in rain or snow. If you use too much power, the drive wheels may spin. You could lose control. If the drive wheels begin to spin, take your foot off the accelerator.

2.2.2 – Steering

Hold the steering wheel firmly with both hands. Your hands should be on opposite sides of the wheel. If you hit a curb or a pothole (chuckhole), the wheel could pull away from your hands unless you have a firm hold.

2.2.3 – Stopping

Push the brake pedal down gradually. The amount of brake pressure you need to stop the vehicle will depend on the speed of the vehicle and how quickly you need to stop. Control the pressure so the vehicle comes to a smooth, safe stop. If you have a manual transmission, push the clutch in when the engine is close to idle.

2.2.4 – Backing Safely

Because you cannot see everything behind your vehicle, backing is always dangerous. Avoid backing whenever you can. When you park, try to park so you will be able to pull forward when you leave. When you have to back, here are a few simple safety rules:

- Start in the proper position.
- Look at your path.
- Use mirrors on both sides.
- Back slowly.
- Back and turn toward the driver's side whenever possible.
- Use a helper whenever possible.
- These rules are discussed in turn below.

Start in the Proper Position. Put the vehicle in the best position to allow you to back safely. This position will depend on the type of backing to be done.

Look at Your Path. Look at your line of travel before you begin. Get out and walk around the vehicle. Check your clearance to the sides and overhead, in and near the path your vehicle will take.

Use Mirrors on Both Sides. Check the outside mirrors on both sides frequently. Get out of the vehicle and check your path if you are unsure.

Back Slowly. Always back as slowly as possible. Use the lowest reverse gear. That way you can more easily correct any steering errors. You also can stop quickly if necessary.

Back and Turn Toward the Driver's Side. Back to the driver's side so that you can see better. Backing toward the right side is very dangerous because you can't see as well. If you back and turn toward the driver's side, you can watch the rear of your vehicle by looking out the side window. Use driver-side backing--even if it means going around the block to put your vehicle in this position. The added safety is worth it.

Use a Helper. Use a helper when you can. There are blind spots you can't see. That's why a helper is important. The helper should stand near the back of your vehicle where you can see the helper. Before you begin backing, work out a set of hand signals that you both understand. Agree on a signal for "stop."

2.3 – Shifting Gears

Correct shifting of gears is important. If you can't get your vehicle into the right gear while driving, you will have less control.

2.3.1 – Manual Transmissions

Basic Method for Shifting Up. Most heavy vehicles with unsynchronized manual transmissions require double clutching to change gears. If equipped with a synchronized manual transmission, double clutching is NOT required This is the basic method:

- Release accelerator, push in clutch and shift to neutral at the same time.
- Release clutch.
- Let engine and gears slow down to the rpm required for the next gear (this takes practice).
- Push in clutch and shift to the higher gear at the same time.
- Release clutch and press accelerator at the same time.

Shifting gears using double clutching requires practice. If you remain too long in neutral, you may have difficulty putting the vehicle into the next gear. If so, don't try to force it. Return to neutral, release clutch, increase engine speed to match road speed, and try again.

Knowing When to Shift Up. There are two ways of knowing when to shift:

Use Engine Speed (rpm). Study the driver's manual for your vehicle and learn the operating rpm range. Watch your tachometer, and shift up when your engine reaches the top of the range. (Some newer vehicles use "progressive" shifting: the rpm at which you shift becomes higher as you move up in the gears. Find out what's right for the vehicle you will operate.)

Use Road Speed (mph). Learn what speeds each gear is good for. Then, by using the speedometer, you'll know when to shift up.

With either method, you may learn to use engine sounds to know when to shift.

Basic Procedures for Shifting Down

- Release accelerator, push in clutch, and shift to neutral at the same time.
- Release clutch.
- Press accelerator, increase engine and gear speed to the rpm required in the lower gear.
- Push in clutch and shift to lower gear at the same time.
- Release clutch and press accelerator at the same time.
- Downshifting, like upshifting, requires knowing when to shift. Use either the tachometer or the speedometer and downshift at the right rpm or road speed.

Special conditions where you should downshift are:

Before Starting Down a Hill. Slow down and shift down to a speed that you can control without using the brakes hard. Otherwise the brakes can overheat and lose their braking power.

Downshift before starting down the hill. Make sure you are in a low enough gear, usually lower than the gear required to climb the same hill.

Before Entering a Curve. Slow down to a safe speed, and downshift to the right gear before entering the curve. This lets you use some power through the curve to help the vehicle be more stable while turning. It also allows you to speed up as soon as you are out of the curve.

2.3.2 – Multi-speed Rear Axles and Auxiliary Transmissions

Multi-speed rear axles and auxiliary transmissions are used on many vehicles to provide extra gears. You usually control them by a selector knob or switch on the gearshift lever of the main transmission. There are many different shift patterns. Learn the right way to shift gears in the vehicle you will drive.

2.3.3 – Automatic Transmissions

Some vehicles have automatic transmissions. You can select a low range to get greater engine braking when going down grades. The lower ranges prevent the transmission from shifting up beyond the selected gear (unless the governor rpm is exceeded). It is very important to use this braking effect when going down grades.

2.3.4 – Retarders

Some vehicles have "retarders." Retarders help slow a vehicle, reducing the need for using your brakes. They reduce brake wear and give you another way to slow down. There are four basic types of retarders (exhaust, engine, hydraulic, and electric). All retarders can be turned on or off by the driver. On some vehicles the retarding power can be adjusted. When turned "on," retarders apply their braking power (to the drive wheels only) whenever you let up on the accelerator pedal all the way.

Because these devices can be noisy, be sure you know where their use is permitted.

Caution. When your drive wheels have poor traction, the retarder may cause them to skid. Therefore, you should turn the retarder off whenever the road is wet, icy, or snow covered.

Subsections 2.2 and 2.3

Test Your Knowledge

1. Why should you back toward the driver's side?
2. If stopped on a hill, how can you start moving without rolling back?
3. When backing, why is it important to use a helper?
4. What's the most important hand signal that you and the helper should agree on?
5. What are the two special conditions where you should downshift?
6. When should you downshift automatic transmissions?
7. Retarders keep you from skidding when the road is slippery. True or False?
8. What are the two ways to know when to shift?

These questions may be on the test. If you can't answer them all, re-read subsections 2.2 and 2.3.

2.4 – Seeing

To be a safe driver you need to know what's going on all around your vehicle. Not looking properly is a major cause of accidents.

2.4.1 – Seeing Ahead

All drivers look ahead; but many don't look far enough ahead.

Importance of Looking Far Enough Ahead. Because stopping or changing lanes can take a lot of distance, knowing what the traffic is doing on all sides of you is very important. You need to look well ahead to make sure you have room to make these moves safely.

How Far Ahead to Look. Most good drivers look at least 12 to 15 seconds ahead. That means looking ahead the distance you will travel in 12 to 15 seconds. At lower speeds, that's about one block. At highway speeds it's about a quarter of a mile. If you're not looking that far ahead, you may have to stop too quickly or make quick lane changes. Looking 12 to 15 seconds ahead doesn't mean not paying attention to things that are closer. Good drivers shift their attention back and forth, near and far. Figure 2.6 illustrates how far to look ahead.

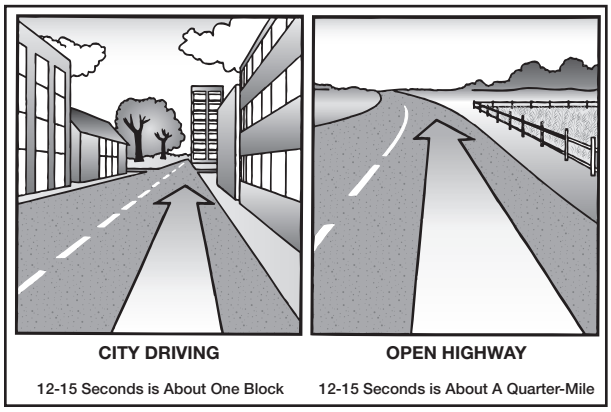

Figure 2.6

Look for Traffic. Look for vehicles coming onto the highway, into your lane, or turning. Watch for brake lights from slowing vehicles. By seeing these things far enough ahead, you can change your speed, or change lanes if necessary to avoid a problem. If a traffic light has been green for a long time it will probably change before you get there. Start slowing down and be ready to stop.

2.4.2 – Seeing to the Sides and Rear

It's important to know what's going on behind and to the sides. Check your mirrors regularly. Check more often in special situations.

Mirror Adjustment. Mirror adjustment should be checked prior to the start of any trip and can only be checked accurately when the trailer(s) are straight. You should check and adjust each mirror to show some part of the vehicle. This will give you a reference point for judging the position of the other images.

Regular Checks. You need to make regular checks of your mirrors to be aware of traffic and to check your vehicle.

Traffic. Check your mirrors for vehicles on either side and in back of you. In an emergency, you may need to know whether you can make a quick lane change. Use your mirrors to spot overtaking vehicles. There are "blind spots" that your mirrors cannot show you. Check your mirrors regularly to know where other vehicles are around you, and to see if they move into your blind spots.

Check Your Vehicle. Use the mirrors to keep an eye on your tires. It's one way to spot a tire fire. If you're carrying open cargo, you can use the mirrors to check it. Look for loose straps, ropes, or chains. Watch for a flapping or ballooning tarp.

Special Situations. Special situations require more than regular mirror checks. These are lane changes, turns, merges, and tight maneuvers.

Lane Changes. You need to check your mirrors to make sure no one is alongside you or about to pass you. Check your mirrors:

- Before you change lanes to make sure there is enough room.
- After you have signaled, to check that no one has moved into your blind spot.
- Right after you start the lane change, to double-check that your path is clear.
- After you complete the lane change.

Turns. In turns, check your mirrors to make sure the rear of your vehicle will not hit anything.

Merges. When merging, use your mirrors to make sure the gap in traffic is large enough for you to enter safely.

Tight Maneuvers. Any time you are driving in close quarters, check your mirrors often. Make sure you have enough clearance.

How to Use Mirrors. Use mirrors correctly by checking them quickly and understanding what you see.

When you use your mirrors while driving on the road, check quickly. Look back and forth between the mirrors and the road ahead. Don't focus on the mirrors for too long. Otherwise, you will travel quite a distance without knowing what's happening ahead.

Many large vehicles have curved (convex, "fisheye," "spot," "bug-eye") mirrors that show a wider area than flat mirrors. This is often helpful. But everything appears smaller in a convex mirror than it would if you were looking at it directly. Things also seem farther away than they really are. It's important to realize this and to allow for it. Figure 2.7 shows the field of vision using a convex mirror.

2.5 – Communicating

2.5.1 – Signal Your Intentions

Other drivers can't know what you are going to do until you tell them.

Signaling what you intend to do is important for safety. Here are some general rules for signaling.

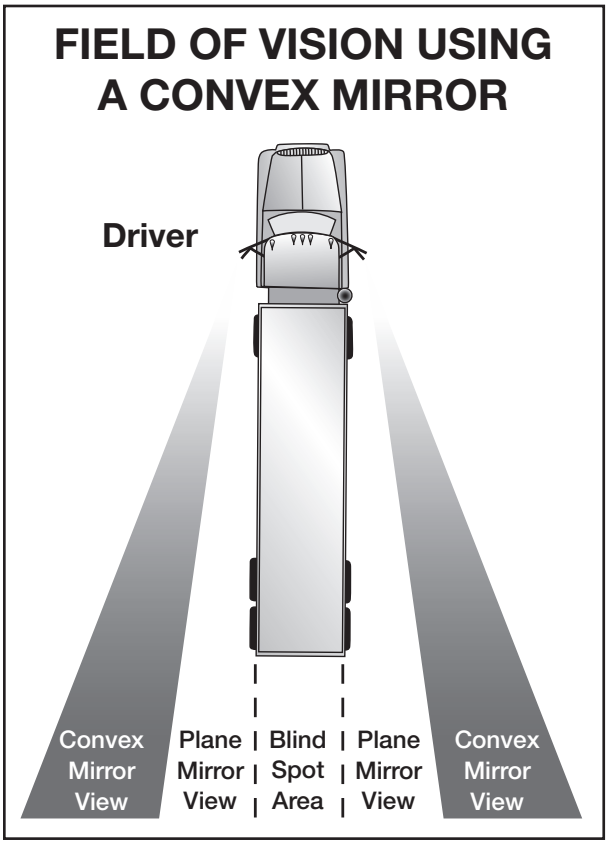

Figure 2.7

Turns. There are three good rules for using turn signals:

- Signal early. Signal well before you turn. It is the best way to keep others from trying to pass you.
- Signal continuously. You need both hands on the wheel to turn safely. Don't cancel the signal until you have completed the turn.
- Cancel your signal. Don't forget to turn off your turn signal after you've turned (if you don't have self-canceling signals).

Lane Changes. Put your turn signal on before changing lanes. Change lanes slowly and smoothly. That way a driver you didn't see may have a chance to honk his/her horn, or avoid your vehicle.

Slowing Down. Warn drivers behind you when you see you'll need to slow down. A few light taps on the brake pedal -- enough to flash the brake lights -- should warn following drivers. Use the four-way emergency flashers for times when you are driving very slowly or are stopped. Warn other drivers in any of the following situations:

Trouble Ahead. The size of your vehicle may make it hard for drivers behind you to see hazards ahead. If you see a hazard that will require slowing down, warn the drivers behind by flashing your brake lights.

Tight Turns. Most car drivers don't know how slowly you have to go to make a tight turn in a large vehicle. Give drivers behind you warning by braking early and slowing gradually.

Stopping on the Road. Truck and bus drivers sometimes stop in the roadway to unload cargo or passengers, or to stop at a railroad crossing. Warn following drivers by flashing your brake lights. Don't stop suddenly.

Driving Slowly. Drivers often do not realize how fast they are catching up to a slow vehicle until they are very close. If you must drive slowly, alert following drivers by turning on your emergency flashers if it is legal. (Laws regarding the use of flashers differ from one state to another. Check the laws of the states where you will drive.)

Don't Direct Traffic. Some drivers try to help out others by signaling when it is safe to pass. You should not do this. You could cause an accident. You could be blamed and it could cost you many thousands of dollars.

2.5.2 – Communicating Your Presence

Other drivers may not notice your vehicle even when it's in plain sight. To help prevent accidents, let them know you're there.

When Passing. Whenever you are about to pass a vehicle, pedestrian, or bicyclist, assume they don't see you. They could suddenly move in front of you. When it is legal, tap the horn lightly or, at night, flash your lights from low to high beam and back. And, drive carefully enough to avoid a crash even if they don't see or hear you.

When It's Hard to See. At dawn, dusk, in rain, or snow, you need to make yourself easier to see. If you are having trouble seeing other vehicles, other drivers will have trouble seeing you. Turn on your lights. Use the headlights, not just the identification or clearance lights. Use the low beams; high beams can bother people in the daytime as well as at night.

When Parked at the Side of the Road. When you pull off the road and stop, be sure to turn on the four-way emergency flashers. This is important at night.

Don't trust the taillights to give warning. Drivers have crashed into the rear of a parked vehicle because they thought it was moving normally.

If you must stop on a road or the shoulder of any road, you must put out your emergency warning devices within ten minutes. Place your warning devices at the following locations:

If you must stop on or by a one-way or divided highway, place warning devices 10 feet, 100 feet, and 200 feet toward the approaching traffic. See Figure 2.8

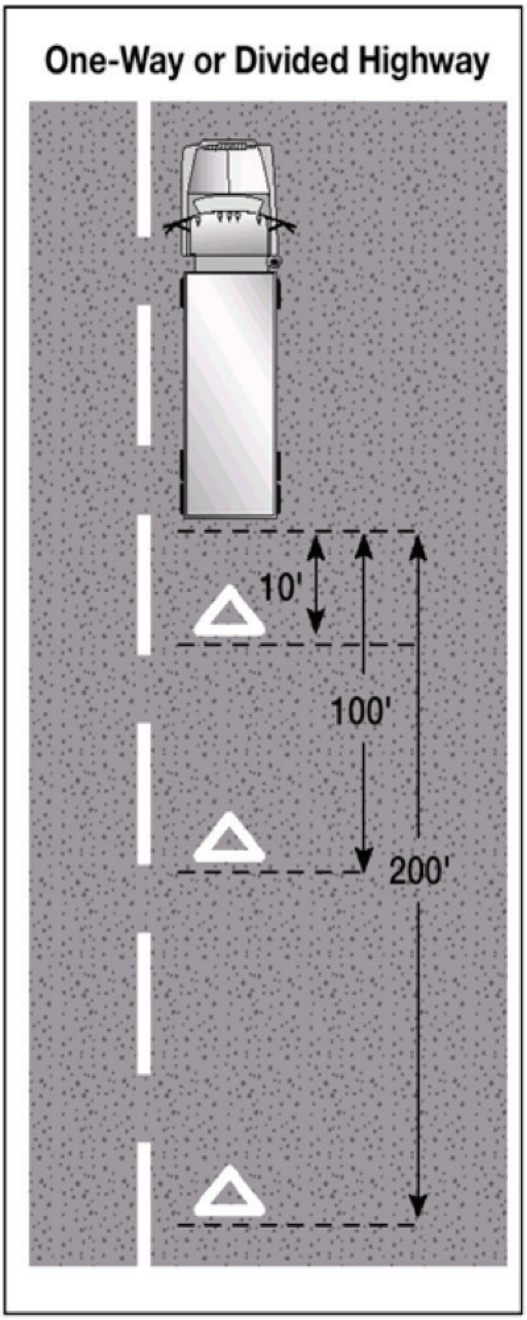

Figure 2.8

If you stop on a two-lane road carrying traffic in both directions or on an undivided highway, place warning devices within 10 feet of the front or rear corners to mark the location of the vehicle and 100 feet behind and ahead of the vehicle, on the shoulder or in the lane you stopped in. See Figure 2.9.

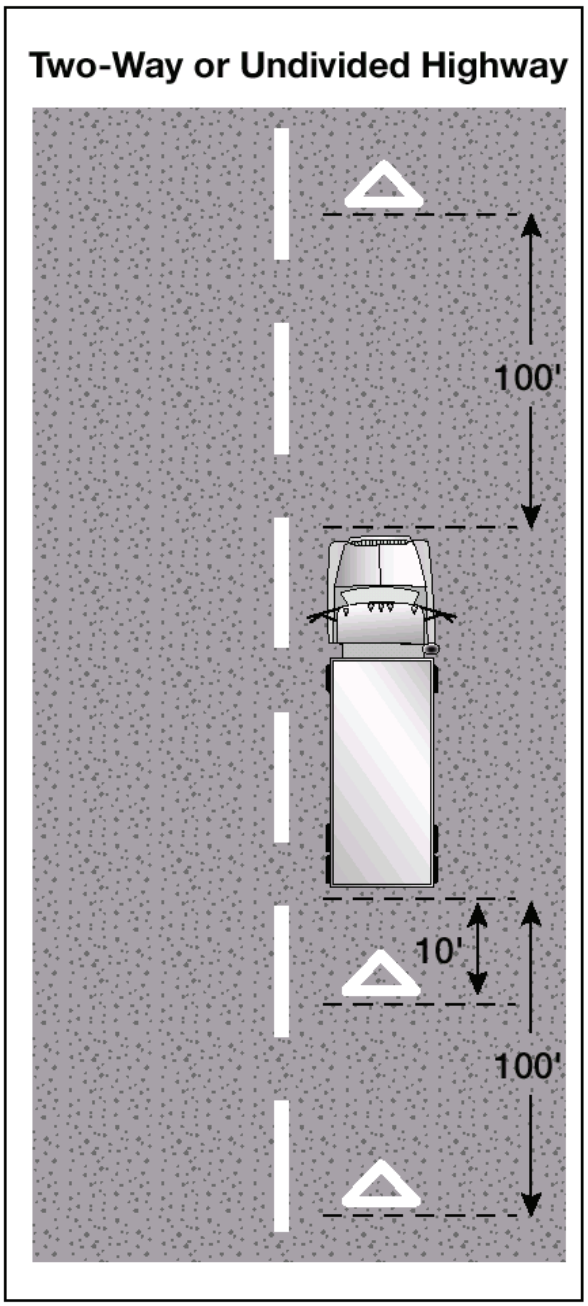

Figure 2.9

Back beyond any hill, curve, or other obstruction that prevents other drivers from seeing the vehicle within 500 feet. If line of sight view is obstructed due to hill or curve, move the rear-most triangle to a point back down the road so warning is provided. See Figure 2.10.

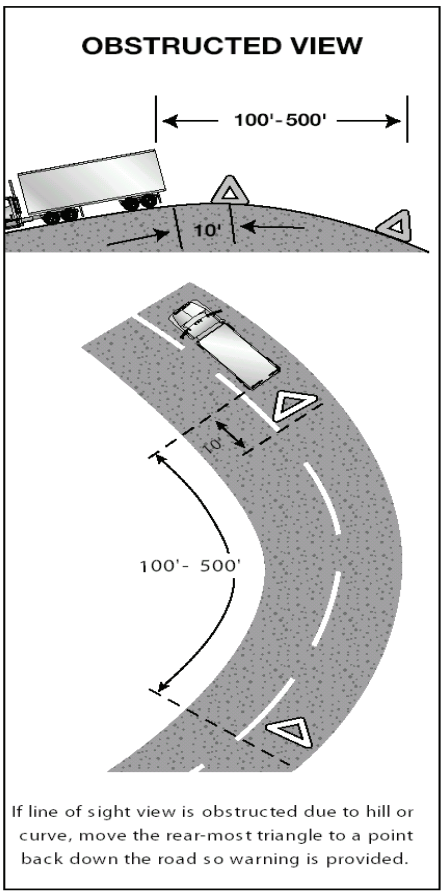

Figure 2.10

When putting out the triangles, hold them between yourself and the oncoming traffic for your own safety. (So other drivers can see you.)

Use Your Horn When Needed. Your horn can let others know you're there. It can help to avoid a crash. Use your horn when needed. However, it can startle others and could be dangerous when used unnecessarily.

2.6 – Controlling Speed

Driving too fast is a major cause of fatal crashes. You must adjust your speed depending on driving conditions. These include traction, curves, visibility, traffic and hills.

2.6.1 – Stopping Distance

Perception Distance + Reaction Distance + Braking Distance = Total Stopping Distance

Perception distance. The distance your vehicle travels, in ideal conditions; from the time your eyes see a hazard until your brain recognizes it. Keep in mind certain mental and physical conditions can affect your perception distance. It can be affected greatly depending on visibility and the hazard itself.

The average perception time for an alert driver is 1¾ seconds. At 55 mph this accounts for 142 feet traveled.

Reaction distance. The distance you will continue to travel, in ideal conditions; before you physically hit the brakes, in response to a hazard seen ahead. The average driver has a reaction time of ¾ second to 1 second. At 55 mph this accounts for 61 feet traveled.

Braking distance. The distance your vehicle will travel, in ideal conditions; while you are braking. At 55 mph on dry pavement with good brakes, it can take about 216 feet.

Total stopping distance. The total minimum distance your vehicle has traveled, in ideal conditions; with everything considered, including perception distance, reaction distance and braking distance, until you can bring your vehicle to a complete stop. At 55 mph, your vehicle will travel a minimum of 419 feet. See Figure 2.11.

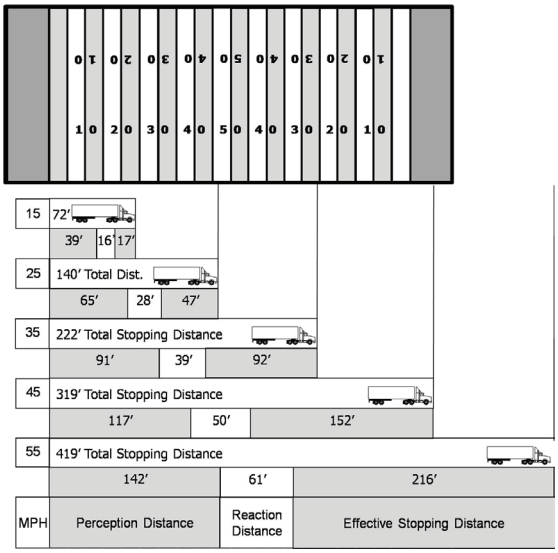

Figure 2.11

The Effect of Speed on Stopping Distance. The faster you drive, the greater the impact or striking power of your vehicle. When you double your speed from 20 to 40 mph the impact is 4 times greater. The braking distance is also 4 times longer. Triple the speed from 20 to 60 mph and the impact and braking distance is 9 times greater. At 60 mph, your stopping distance is greater than the length of a football field. Increase the speed to 80 mph and the impact and braking distance are 16 times greater than at 20 mph. High speeds greatly increase the severity of crashes and stopping distances. By slowing down, you can reduce braking distance.

The Effect of Vehicle Weight on Stopping Distance. The heavier the vehicle, the more work the brakes must do to stop it, and the more heat they absorb. But the brakes, tires, springs, and shock absorbers on heavy vehicles are designed to work best when the vehicle is fully loaded. Empty trucks require greater stopping distances because an empty vehicle has less traction.

2.6.2 – Matching Speed to the Road Surface

You can't steer or brake a vehicle unless you have traction. Traction is friction between the tires and the road. There are some road conditions that reduce traction and call for lower speeds.

Slippery Surfaces. It will take longer to stop, and it will be harder to turn without skidding, when the road is slippery. Wet roads can double stopping distance. You must drive slower to be able to stop in the same distance as on a dry road. Reduce speed by about one-third (e.g., slow from 55 to about 35 mph) on a wet road. On packed snow, reduce speed by a half, or more. If the surface is icy, reduce speed to a crawl and stop driving as soon as you can safely do so.

Identifying Slippery Surfaces. Sometimes it's hard to know if the road is slippery. Here are some signs of slippery roads:

Shaded Areas. Shady parts of the road will remain icy and slippery long after open areas have melted.

Bridges. When the temperature drops, bridges will freeze before the road will. Be especially careful when the temperature is close to 32 degrees Fahrenheit.

Melting Ice. Slight melting will make ice wet. Wet ice is much more slippery than ice that is not wet.

Black Ice. Black ice is a thin layer that is clear enough that you can see the road underneath it. It makes the road look wet. Any time the temperature is below freezing and the road looks wet, watch out for black ice.

Vehicle Icing. An easy way to check for ice is to open the window and feel the front of the mirror, mirror support, or antenna. If there's ice on these, the road surface is probably starting to ice up.

Just After Rain Begins. Right after it starts to rain, the water mixes with oil left on the road by vehicles. This makes the road very slippery. If the rain continues, it will wash the oil away.

Hydroplaning. In some weather, water or slush collects on the road. When this happens, your vehicle can hydroplane. It's like water skiing--the tires lose their contact with the road and have little or no traction. You may not be able to steer or brake. You can regain control by releasing the accelerator and pushing in the clutch. This will slow your vehicle and let the wheels turn freely. If the vehicle is hydroplaning, do not use the brakes to slow down. If the drive wheels start to skid, push in the clutch to let them turn freely.

It does not take a lot of water to cause hydroplaning. Hydroplaning can occur at speeds as low as 30 mph if there is a lot of water. Hydroplaning is more likely if tire pressure is low, or the tread is worn. (The grooves in a tire carry away the water; if they aren't deep, they don't work well.)

Road surfaces where water can collect can create conditions that cause a vehicle to hydroplane. Watch for clear reflections, tire splashes, and raindrops on the road. These are indications of standing water.

2.6.3 – Speed and Curves

Drivers must adjust their speed for curves in the road. If you take a curve too fast, two things can happen. The tires can lose their traction and continue straight ahead, so you skid off the road. Or, the tires may keep their traction and the vehicle rolls over. Tests have shown that trucks with a high center of gravity can roll over at the posted speed limit for a curve.

Slow to a safe speed before you enter a curve. Braking in a curve is dangerous because it is easier to lock the wheels and cause a skid. Slow down as needed. Don't ever exceed the posted speed limit for the curve. Be in a gear that will let you accelerate slightly in the curve. This will help you keep control.

2.6.4 – Speed and Distance Ahead

You should always be able to stop within the distance you can see ahead. Fog, rain, or other conditions may require that you slowdown to be able to stop in the distance you can see. At night, you can't see as far with low beams as you can with high beams. When you must use low beams, slow down.

2.6.5 – Speed and Traffic Flow

When you're driving in heavy traffic, the safest speed is the speed of other vehicles. Vehicles going the same direction at the same speed are not likely to run into one another. In many states, speed limits are lower for trucks and buses than for cars. It can vary as much as 15 mph. Use extra caution when you change lanes or pass on these roadways. Drive at the speed of the traffic, if you can without going at an illegal or unsafe speed. Keep a safe following distance.

The main reason drivers exceed speed limits is to save time. But, anyone trying to drive faster than the speed of traffic will not be able to save much time. The risks involved are not worth it. If you go faster than the speed of other traffic, you'll have to keep passing other vehicles. This increases the chance of a crash, and it is more tiring. Fatigue increases the chance of a crash. Going with the flow of traffic is safer and easier.

2.6.6 – Speed on Downgrades

Your vehicle's speed will increase on downgrades because of gravity. Your most important objective is to select and maintain a speed that is not too fast for the:

- Total weight of the vehicle and cargo.
- Length of the grade.
- Steepness of the grade.
- Road conditions.
- Weather.

If a speed limit is posted, or there is a sign indicating "Maximum Safe Speed," never exceed the speed shown. Also, look for and heed warning signs indicating the length and steepness of the grade. You must use the braking effect of the engine as the principal way of controlling your speed on downgrades. The braking effect of the engine is greatest when it is near the governed rpms and the transmission is in the lower gears. Save your brakes so you will be able to slow or stop as required by road and traffic conditions. Shift your transmission to a low gear before starting down the grade and use the proper braking techniques. Please read carefully the section on going down long, steep downgrades safely in "Mountain Driving."

2.6.7 – Roadway Work Zones

Speeding traffic is the number one cause of injury and death in roadway work zones. Observe the posted speed limits at all times when approaching and driving through a work zone. Watch your speedometer, and don't allow your speed to creep up as you drive through long sections of road construction. Decrease your speed for adverse weather or road conditions. Decrease your speed even further when a worker is close to the roadway.

Subsections 2.4, 2.5, and 2.6
Test Your Knowledge

1. How far ahead does the manual say you should look?
2. What are two main things to look for ahead?
3. What's your most important way to see the sides and rear of your vehicle?
4. What does "communicating" mean in safe driving?
5. Where should you place reflectors when stopped on a divided highway?
6. What three things add up to total stopping distance?
7. If you go twice as fast, will your stopping distance increase by two or four times?
8. Empty trucks have the best braking. True or False?
10. What is hydroplaning?
11. What is "black ice"?

These questions may be on the test. If you can't answer them all, re-read subsections 2.4, 2.5, and 2.6.

2.7 – Managing Space

To be a safe driver, you need space all around your vehicle. When things go wrong, space gives you time to think and to take action.

To have space available when something goes wrong, you need to manage space. While this is true for all drivers, it is very important for large vehicles. They take up more space and they require more space for stopping and turning.

2.7.1 – Space Ahead

Of all the space around your vehicle, it is the area ahead of the vehicle--the space you're driving into --that is most important.

The Need for Space Ahead. You need space ahead in case you must suddenly stop. According to accident reports, the vehicle that trucks and buses most often run into is the one in front of them. The most frequent cause is following too closely. Remember, if the vehicle ahead of you is smaller than yours, it can probably stop faster than you can. You may crash if you are following too closely.

How Much Space? How much space should you keep in front of you? One good rule says you need at least one second for each 10 feet of vehicle length at speeds below 40 mph. At greater speeds, you must add 1 second for safety. For example, if you are driving a 40-foot vehicle, you should leave 4 seconds between you and the vehicle ahead. In a 60-foot rig, you'll need 6 seconds. Over 40 mph, you'd need 5 seconds for a 40-foot vehicle and 7 seconds for a 60-foot vehicle. See Figure 2.12.

To know how much space you have, wait until the vehicle ahead passes a shadow on the road, a pavement marking, or some other clear landmark. Then count off the seconds like this: "one thousand-and-one, one thousand-and-two" and so on, until you reach the same spot. Compare your count with the rule of one second for every ten feet of length.

If you are driving a 40-foot truck and only counted up to 2 seconds, you're too close. Drop back a little and count again until you have 4 seconds of following distance (or 5 seconds, if you're going over 40 mph). After a little practice, you will know how far back you should be. Remember to add 1 second for speeds above 40 mph. Also remember that when the road is slippery, you need much more space to stop.

HEAVY VEHICLE FORMULA

For timed interval following distance

- **1 second required for each 10 feet of vehicle length at speeds under 40 MPH**
- **Above 40 MPH use same formula, then add 1 second for the additional speed**

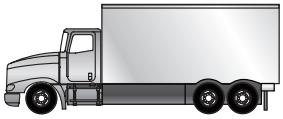

40 foot truck (under 40 MPH) = 4 seconds

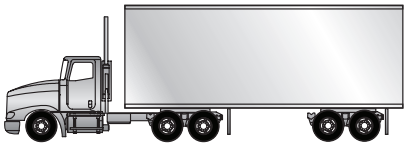

50 foot truck (above 40 MPH) = 6 seconds

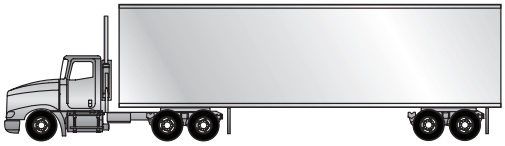

60 foot truck (under 40 MPH) = 6 seconds

Figure 2.12

2.7.2 – Space Behind

You can't stop others from following you too closely. But there are things you can do to make it safer.

Stay to the Right. Heavy vehicles are often tailgated when they can't keep up with the speed of traffic. This often happens when you're going uphill. If a heavy load is slowing you down, stay in the right lane if you can. Going uphill, you should not pass another slow vehicle unless you can get around quickly and safely.

Dealing with Tailgaters Safely. In a large vehicle, it's often hard to see whether a vehicle is close behind you. You may be tailgated:

- When you are traveling slowly. Drivers trapped behind slow vehicles often follow closely.
- In bad weather. Many car drivers follow large vehicles closely during bad weather, especially when it is hard to see the road ahead.

If you find yourself being tailgated, here are some things you can do to reduce the chances of a crash:

- **Avoid quick changes.** If you have to slow down or turn, signal early, and reduce speed very gradually.
- **Increase your following distance.** Opening up room in front of you will help you to avoid having to make sudden speed or direction changes. It also makes it easier for the tailgater to get around you.
- **Don't speed up.** It's safer to be tailgated at a low speed than a high speed.
- **Avoid tricks.** Don't turn on your taillights or flash your brake lights. Follow the suggestions above.

2.7.3 – Space to the Sides

Commercial vehicles are often wide and take up most of a lane. Safe drivers will manage what little space they have. You can do this by keeping your vehicle centered in your lane, and avoid driving alongside others.

Staying Centered in a Lane. You need to keep your vehicle centered in the lane to keep safe clearance on either side. If your vehicle is wide, you have little room to spare.

Traveling Next to Others. There are two dangers in traveling alongside other vehicles:

- Another driver may change lanes suddenly and turn into you.
- You may be trapped when you need to change lanes.

Find an open spot where you aren't near other traffic. When traffic is heavy, it may be hard to find an open spot. If you must travel near other vehicles, try to keep as much space as possible between you and them. Also, drop back or pull forward so that you are sure the other driver can see you.

Strong Winds. Strong winds make it difficult to stay in your lane. The problem is usually worse for lighter vehicles. This problem can be especially bad coming out of tunnels. Don't drive alongside others if you can avoid it.

2.7.4 – Space Overhead

Hitting overhead objects is a danger. Make sure you always have overhead clearance.

- Don't assume that the heights posted at bridges and overpasses are correct. Re-paving or packed snow may have reduced the clearances since the heights were posted.
- The weight of a cargo van changes its height. An empty van is higher than a loaded one. That you got under a bridge when you were loaded does not mean that you can do it when you are empty.
- If you doubt you have safe space to pass under an object, go slowly. If you aren't sure you can make it, take another route. Warnings are often posted on low bridges or underpasses, but sometimes they are not.
- Some roads can cause a vehicle to tilt. There can be a problem clearing objects along the edge of the road, such as signs, trees, or bridge supports. Where this is a problem, drive a little closer to the center of the road.
- Before you back into an area, get out and check for overhanging objects such as trees, branches, or electric wires. It's easy to miss seeing them while you are backing. (Also check for other hazards at the same time.)

2.7.5 – Space Below

Many drivers forget about the space under their vehicles. That space can be very small when a vehicle is heavily loaded. This is often a problem on dirt roads and in unpaved yards. Don't take a chance on getting hung up. Drainage channels across roads can cause the ends of some vehicles to drag. Cross such depressions carefully.

Railroad tracks can also cause problems, particularly when pulling trailers with a low underneath clearance. Don't take a chance on getting hung up halfway across.

2.7.6 – Space for Turns

The space around a truck or bus is important in turns. Because of wide turning and off-tracking, large vehicles can hit other vehicles or objects during turns.

Right Turns. Here are some rules to help prevent right-turn crashes:

- Turn slowly to give yourself and others more time to avoid problems.
- If you are driving a truck or bus that cannot make the right turn without swinging into another lane, turn wide as you complete the turn. Keep the rear of your vehicle close to the curb. This will stop other drivers from passing you on the right.
- Don't turn wide to the left as you start the turn. A following driver may think you are turning left and try to pass you on the right. You may crash into the other vehicle as you complete your turn.
- If you must cross into the oncoming lane to make a turn, watch out for vehicles coming toward you. Give them room to go by or to stop. However, don't back up for them, because you might hit someone behind you. See Figure 2.13.

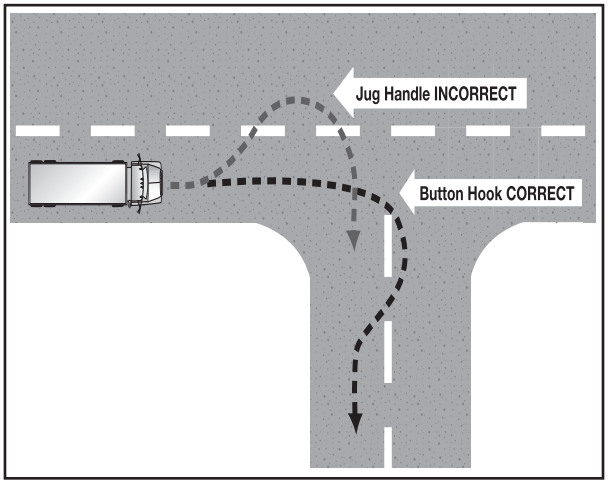

Figure 2.13

Left Turns. On a left turn, make sure you have reached the center of the intersection before you start the left turn. If you turn too soon, the left side of your vehicle may hit another vehicle because of off-tracking.

If there are two turning lanes, always take the right turn lane. Don't start in the inside lane because you may have to swing right to make the turn. Drivers on your left can be more readily seen. See Figure 2.14.

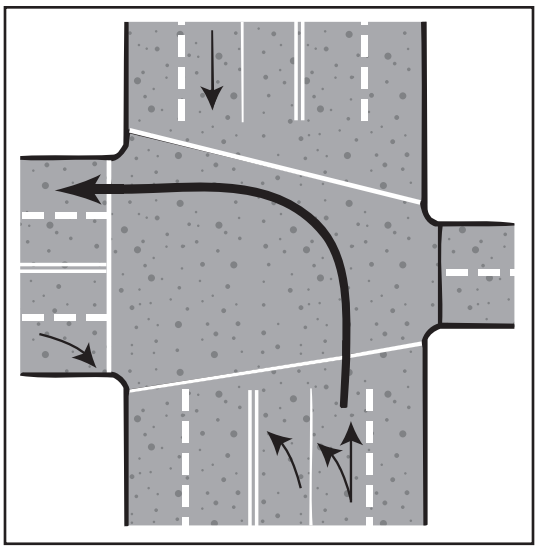

Figure 2.14

2.7.7 – Space Needed to Cross or Enter Traffic

Be aware of the size and weight of your vehicle when you cross or enter traffic. Here are some important things to keep in mind.

- Because of slow acceleration and the space large vehicles require, you may need a much larger gap to enter traffic than you would in a car.
- Acceleration varies with the load. Allow more room if your vehicle is heavily loaded.
- Before you start across a road, make sure you can get all the way across before traffic reaches you.

2.8 – Seeing Hazards

2.8.1 – Importance of Seeing Hazards

What Is a Hazard? A hazard is any road condition or other road user (driver, bicyclist, pedestrian) that is a possible danger. For example, a car in front of you is headed toward the freeway exit, but his brake lights come on and he begins braking hard. This could mean that the driver is uncertain about taking the off ramp. He might suddenly return to the highway. This car is a hazard. If the driver of the car cuts in front of you, it is no longer just a hazard; it is an emergency.

Seeing Hazards Lets You Be Prepared. You will have more time to act if you see hazards before they become emergencies. In the example above, you might make a lane change or slow down to prevent a crash if the car suddenly cuts in front of you. Seeing this hazard gives you time to check your mirrors and signal a lane change. Being prepared

reduces the danger. A driver who did not see the hazard until the slow car pulled back on the highway in front of him would have to do something very suddenly. Sudden braking or a quick lane change is much more likely to lead to a crash.

Learning to See Hazards. There are often clues that will help you see hazards. The more you drive, the better you can learn to see hazards. This section will talk about hazards that you should be aware of.

2.8.2 – Hazardous Roads

[Move-Over Laws]

[The incidents of law enforcement officers, emergency medical services, fire department personnel and people working on the road are being struck while performing duties at the roadside are increasing at a frightening pace. To lessen the problem, move-over laws have been enacted, which require drivers to slow and change lanes when approaching a roadside incident or emergency vehicle. Signs are posted on roadways in states that have such laws].

[When approaching an authorized emergency vehicle stopped on the roadside or a work zone, you should proceed with caution by slowing and yielding the right-of-way by making a lane change into a lane not next to that of the authorized emergency vehicle or work zone if safety and traffic conditions permit. If a lane change is unsafe, slow down and proceed with caution while maintaining a safe speed for traffic conditions].

Slow down and be very careful if you see any of the following road hazards.

Work Zones. When people are working on the road, it is a hazard. There may be narrower lanes, sharp turns, or uneven surfaces. Other drivers are often distracted and drive unsafely. Workers and construction vehicles may get in the way. Drive slowly and carefully near work zones. Use your four-way flashers or brake lights to warn drivers behind you.

Drop Off. Sometimes the pavement drops off sharply near the edge of the road. Driving too near the edge can tilt your vehicle toward the side of the road. This can cause the top of your vehicle to hit roadside objects (signs, tree limbs). Also, it can be hard to steer as you cross the drop off, going off the road, or coming back on.

Foreign Objects. Things that have fallen on the road can be hazards. They can be a danger to your tires and wheel rims. They can damage electrical and brake lines. They can be caught between dual tires and cause severe damage. Some obstacles that appear to be harmless can be very dangerous. For example, cardboard boxes may be empty, but they may also contain some solid or heavy material capable of causing damage. The same is true of paper and cloth sacks. It is important to remain alert for objects of all sorts, so you can see them early enough to avoid them without making sudden, unsafe moves.

Off Ramps/On Ramps. Freeway and turnpike exits can be particularly dangerous for commercial vehicles. Off ramps and on ramps often have speed limit signs posted. Remember, these speeds may be safe for automobiles, but may not be safe for larger vehicles or heavily loaded vehicles. Exits that go downhill and turn at the same time can be especially dangerous. The downgrade makes it difficult to reduce speed. Braking and turning at the same time can be a dangerous practice. Make sure you are going slowly enough before you get on the curved part of an off ramp or on ramp.

2.8.3 – Drivers Who Are Hazards

In order to protect yourself and others, you must know when other drivers may do something hazardous. Some clues to this type of hazard are discussed below.

Blocked Vision. People who can't see others are a very dangerous hazard. Be alert for drivers whose vision is blocked. Vans, loaded station wagons, and cars with the rear window blocked are examples. Rental trucks should be watched carefully. Their drivers are often not used to the limited vision they have to the sides and rear of the truck. In winter, vehicles with frosted, ice-covered, or snow-covered windows are hazards.

Vehicles may be partly hidden by blind intersections or alleys. If you only can see the rear or front end of a vehicle but not the driver, then he or she can't see you. Be alert because he/she may back out or enter into your lane. Always be prepared to stop.

Delivery Trucks Can Present a Hazard. Packages or vehicle doors often block the driver's vision. Drivers of step vans, postal vehicles, and local delivery vehicles often are in a hurry and may suddenly step out of their vehicle or drive their vehicle into the traffic lane.

Parked Vehicles Can Be Hazards, especially when people start to get out of them. Or, they may suddenly start up and drive into your way. Watch for movement inside the vehicle or movement of the vehicle itself that shows people are inside.

Watch for brake lights or backup lights, exhaust, and other clues that a driver is about to move.

Be careful of a stopped bus. Passengers may cross in front of or behind the bus, and they often can't see you.

Pedestrians and Bicyclists Can Also Be Hazards. Walkers, joggers, and bicyclists may be on the road with their back to the traffic, so they can't see you. Sometimes they wear portable stereos with headsets, so they can't hear you either. This can be dangerous. On rainy days, pedestrians may not see you because of hats or umbrellas. They may be hurrying to get out of the rain and may not pay attention to the traffic.

Distractions. People who are distracted are hazards. Watch for where they are looking. If they are looking elsewhere, they can't see you. But be alert even when they are looking at you. They may believe that they have the right of way.

Children. Children tend to act quickly without checking traffic. Children playing with one another may not look for traffic and are a serious hazard.

Talkers. Drivers or pedestrians talking to one another may not be paying close attention to the traffic.

Workers. People working on or near the roadway are a hazard clue. The work creates a distraction for other drivers and the workers themselves may not see you.

Ice Cream Trucks. Someone selling ice cream is a hazard clue. Children may be nearby and may not see you.

Disabled Vehicles. Drivers changing a tire or fixing an engine often do not pay attention to the danger that roadway traffic is to them. They are often careless. Jacked up wheels or raised hoods are hazard clues.

Accidents. Accidents are particularly hazardous. People involved in the accident may not look for traffic. Passing drivers tend to look at the accident. People often run across the road without looking. Vehicles may slow or stop suddenly.

Shoppers. People in and around shopping areas are often not watching traffic because they are looking for stores or looking into store windows.

Confused Drivers. Confused drivers often change direction suddenly or stop without warning. Confusion is common near freeway or turnpike interchanges and major intersections. Tourists unfamiliar with the area can be very hazardous. Clues to tourists include car-top luggage and out-of-state license plates. Unexpected actions (stopping in the middle of a block, changing lanes for no apparent reason, backup lights suddenly going on) are clues to confusion. Hesitation is another clue, including driving very slowly, using brakes often, or stopping in the middle of an intersection. You may also see drivers who are looking at street signs, maps, and house numbers. These drivers may not be paying attention to you.

Slow Drivers. Motorists who fail to maintain normal speed are hazards. Seeing slow moving vehicles early can prevent a crash. Some vehicles, by their nature, are slow and seeing them is a hazard clue (mopeds, farm machinery, construction machinery, tractors, etc.). Some of these will have the "slow moving vehicle" symbol to warn you. This is a red triangle with an orange center. Watch for it.

Drivers Signaling a Turn May Be a Hazard. Drivers signaling a turn may slow more than expected or stop. If they are making a tight turn into an alley or driveway, they may go very slowly. If pedestrians or other vehicles block them, they may have to stop on the roadway. Vehicles turning left may have to stop for oncoming vehicles.

Drivers in a Hurry. Drivers may feel your commercial vehicle is preventing them from getting where they want to go on time. Such drivers may pass you without a safe gap in the oncoming traffic, cutting too close in front of you. Drivers entering the road may pull in front of you in order to avoid being stuck behind you, causing you to brake. Be aware of this and watch for drivers who are in a hurry.

Impaired Drivers. Drivers who are sleepy, have had too much to drink, are on drugs, or who are ill are hazards. Some clues to these drivers are:

- Weaving across the road or drifting from one side to another.
- Leaving the road (dropping right wheels onto the shoulder, or bumping across a curb in a turn).
- Stopping at the wrong time (stopping at a green light, or waiting for too long at a stop).
- Open window in cold weather.
- Speeding up or slowing down suddenly, driving too fast or too slow.
- Be alert for drunk drivers and sleepy drivers late at night.

Driver Body Movement as a Clue. Drivers look in the direction they are going to turn. You may sometimes get a clue from a driver's head and body movements that a driver may be going to make a turn, even though the turn signals aren't

on. Drivers making over-the-shoulder checks may be going to change lanes. These clues are most easily seen in motorcyclists and bicyclists. Watch other road users and try to tell whether they might do something hazardous.

Conflicts. You are in conflict when you have to change speed and/or direction to avoid hitting someone. Conflicts occur at intersections where vehicles meet, at merges (such as turnpike on ramps) and where there are needed lane changes (such as the end of a lane, forcing a move to another lane of traffic). Other situations include slow moving or stalled traffic in a traffic lane, and accident scenes. Watch for other drivers who are in conflict because they are a hazard to you. When they react to this conflict, they may do something that will put them in conflict with you.

2.8.4 – Always Have a Plan

You should always be looking for hazards. Continue to learn to see hazards on the road. However, don't forget why you are looking for the hazards--they may turn into emergencies. You look for the hazards in order to have time to plan a way out of any emergency. When you see a hazard, think about the emergencies that could develop and figure out what you would do. Always be prepared to take action based on your plans. In this way, you will be a prepared, defensive driver who will improve your own safety as well as the safety of all road users.

Subsections 2.7 and 2.8
Test Your Knowledge

1. How do you find out how many seconds of following distance space you have?
2. If you are driving a 30-foot vehicle at 55 mph, how many seconds of following distance should you allow?
3. You should decrease your following distance if somebody is following you too closely. True or False?
4. If you swing wide to the left before turning right, another driver may try to pass you on the right. True or False?
5. What is a hazard?
6. Why make emergency plans when you see a hazard?

These questions may be on the test. If you can't answer them all, re-read subsections 2.7 and 2.8

2.9 – Distracted Driving

A driver distraction is anything that takes your attention away from driving. Whenever you are driving a vehicle and your full attention is not on the driving task, you are putting yourself, your passengers, other vehicles, and pedestrians in danger. Distracted driving can cause collisions, resulting in injury, death or property damage.

Activities inside of the vehicle that can distract your attention include: talking to passengers; adjusting the radio, CD player or climate controls; eating, drinking or smoking; reading maps or other literature; picking up something that fell; talking on a cell phone or CB radio; reading or sending text messages; using any type of telematic or electronic devices (such as navigation systems, pagers, personal digital assistant, computers, etc.); daydreaming or being occupied with other mental distractions; and many others.

Possible distractions that could occur outside a moving vehicle: outside traffic, vehicles or pedestrians; outside events such as police pulling someone over or a crash scene; sunlight/sunset; objects in roadway; road construction; reading billboards or other road advertisements; and many others.

2.9.1 – The Distracted Driving Crash Problem

The Large Truck Crash Causation Study (LTCCS) reported that 8 percent of large-truck crashes occurred when Commercial Motor Vehicle (CMV) drivers were externally distracted and 2 percent of large truck crashes occurred when the driver was internally distracted.

Approximately 5,500 people are killed each year on U.S. roadways and an estimated 448,000 are injured in motor vehicle crashes involving distracted driving (NHTSA Traffic Safety Facts: Distracted Driving).

Research indicates that the burden of talking on a cell phone - even if it's hands-free - saps the brain of 39% of the energy it would ordinarily devote to safe driving. Drivers who use a hand-held device are more likely to get into a crash serious enough to cause injury. (NHTSA distracted driving website, www.distraction.gov).

2.9.2 – Effects of Distracted Driving

Effects of distracted driving include slowed perception, which may cause you to be delayed in perceiving or completely fail to perceive an important traffic event; delayed decision making

and improper action, which can cause you to be delayed in taking the proper action or make incorrect inputs to the steering, accelerator or brakes.

2.9.3 – Types of Distractions

There are many causes of distraction, all with the potential to increase risk.

- **Physical distraction** – one that causes you to take your hands off the wheel or eyes off the road, such as reaching for an object.
- **Mental distraction** – activities that take your mind away from the road, such as engaging in conversation with a passenger or thinking about something that happened during the day.
- **Both physical and mental distraction** – even greater chance a crash could happen, such as talking on a cell phone; or sending or reading text messages.

2.9.4 – Cell/Mobile Phones

49 CFR Part 383, 384, 390, 391 and 392 of the Federal Motor Carrier Safety Regulations (FMCSRs) and the Hazardous Materials Regulations (HMR) restricts the use of hand-held mobile telephones by drivers of commercial motor vehicles (CMVs); and implements new driver disqualification sanctions for drivers of CMVs who fail to comply with this Federal restriction; or who have multiple convictions for violating a State or local law or ordinance on motor vehicle traffic control that restricts the use of hand-held mobile telephones. Additionally, motor carriers are prohibited from requiring or allowing drivers of CMVs to use hand-held mobile telephones.

The use of hand-held mobile telephones means, "using at least one hand to hold a mobile telephone to conduct a voice communication; "dialing a mobile telephone by pressing more than a single button"; or "moving from a seated driving position while restrained by a seat belt to reach for a mobile telephone". If you choose to use a mobile phone while operating a CMV, you may only use a hands free mobile phone that is located close to you and that can be operated in compliance with the rule to conduct a voice communication.

Your CDL will be disqualified after two or more convictions of any state law on hand-held mobile telephone use while operating a CMV. Disqualification is 60 days for the second offense within 3 years and 120 days for three or more offenses within 3 years. In addition, the first and each subsequent violation of such a prohibition are subject to civil penalties imposed on such drivers, in an amount up to $2,750. Motor carriers must not allow nor require drivers to use a hand-held mobile telephone while driving. Employers may also be subject to civil penalties in an amount up to $11,000. There is an emergency exception that allows you to use your hand-held mobile telephones if necessary to communicate with law enforcement officials or other emergency services.

Research shows that the odds of being involved in a safety-critical event (e.g., crash, near-crash, unintentional lane deviation) is 6 times greater for CMV drivers who engage in dialing a mobile telephone while driving than for those who do not. Dialing drivers took their eyes off the forward roadway for an average of 3.8 seconds. At 55 mph (or 80.7 feet per second), this equates to a driver traveling 306 feet, the approximate length of a football field, without looking at the roadway.

Your primary responsibility is to operate a motor vehicle safely. To do this, you must focus your full attention on the driving task.

Note that hands-free devices are no less likely than hand-held cell phones to cause you to become distracted. Attention is diverted from the driving task while using either device.

2.9.5 –Texting

49 CFR Part 383, 384, 390, 391, 392, the Federal Motor Carrier Safety Regulations (FMCSR) prohibits texting by commercial motor vehicle (CMV) drivers while operating in interstate commerce; and implements new driver disqualification sanctions for drivers of CMVs who fail to comply with this Federal prohibition; or who have multiple convictions for violating a State or local law or ordinance on motor vehicle traffic control that prohibits texting while driving. Additionally, motor carriers are prohibited from requiring or allowing their drivers to engage in texting while driving.

Texting means manually entering text into, or reading text from, an electronic device. This includes, but is not limited to, short message service, e-mailing, instant messaging, a command or request to access a World Wide Web page, or engaging in any other form of electronic text retrieval or entry, for present or future communication.

Electronic device includes, but is not limited to, a cellular telephone; personal digital assistant; pager; computer; or any other device used to enter, write, send, receive, or read text.

Your CDL will be disqualified after two or more convictions of any state law on texting while operating a CMV. Disqualification is 60 days for the second offense within 3 years and 120 days for three or more offenses within 3 years. In addition, the first and each subsequent violation of such a prohibition are subject to civil penalties imposed on such drivers, in an amount up to $2,750. No motor carrier shall allow or require its drivers to engage in texting while driving. There is an emergency exception that allows you text if necessary to communicate with law enforcement officials or other emergency services.

Evidence suggests that text messaging is even riskier than talking on a cell phone because it requires you to look at a small screen and manipulate the keypad with one's hands. Texting is the most alarming distraction because it involves both physical and mental distraction simultaneously.

Research shows that the odds of being involved in a safety-critical event (e.g., crash, near-crash, unintentional lane deviation) is 23.2 times greater for CMV drivers who engage in texting while driving than for those who do not. Sending or receiving text takes your eyes from the road for an average of 4.6 seconds. At 55 mph, you would travel 371 feet, or the length of an entire football field – *without looking at the roadway*.

2.9.6 – Don't Drive Distracted

Your goal should be to eliminate all in-vehicle distractions before driving begins. Accomplishing this goal can be done by:

- Assessing all potential in-vehicle distractions before driving
- Developing a preventative plan to reduce/ eliminate possible distractions
- Expecting distractions to occur
- Discussing possible scenarios before getting behind the wheel

Based on the assessment of potential distractions, you can formulate a preventative plan to reduce/ eliminate possible distractions.

If drivers react a half-second slower because of distractions, crashes double. Some tips to follow so you won't become distracted:

- Turn off all communication devices.
- If you must use a mobile phone, make sure it is within close proximity, that it is operable while you are restrained, use an earpiece or the speaker phone function, use voice-activated dialing; or use the hands-free feature. Drivers are <u>not</u> in compliance if they unsafely reach for a mobile phone, even if they intend to use the hands-free function.
- Do not type or read a text message on a mobile device while driving.
- Familiarize yourself with your vehicle's features and equipment, before you get behind the wheel.
- Adjust all vehicle controls and mirrors to your preferences prior to driving.
- Pre-program radio stations and pre-load your favorite CDs.
- Clear the vehicle of any unnecessary objects and secure cargo.
- Review maps, program the GPS and plan your route before you begin driving.
- Don't attempt to read or write while you drive.
- Avoid smoking, eating and drinking while you drive. Leave early to allow yourself time to stop to eat.
- Don't engage in complex or emotionally intense conversations with other occupants.
- Secure commitment from other occupants to behave responsibly and to support the driver in reducing distractions.

2.9.7 – Watch Out for Other Distracted Drivers

You need to be able to recognize other drivers who are engaged in any form of driving distraction. Not recognizing other distracted drivers can prevent you from perceiving or reacting correctly in time to prevent a crash. Watch for:

- Vehicles that may drift over the lane divider lines or within their own lane.
- Vehicles traveling at inconsistent speeds.
- Drivers who are preoccupied with maps, food, cigarettes, cell phones, or other objects.
- Drivers who appear to be involved in conversations with their passengers.

Give a distracted driver plenty of room and maintain your safe following distance.

Be very careful when passing a driver who seems to be distracted. The other driver may not be aware of your presence, and they may drift in front of you.

2.10 – Aggressive Drivers/Road Rage

2.10.1 – What Is It?

Aggressive driving and road rage is not a new problem. However, in today's world, where heavy and slow-moving traffic and tight schedules are the norm, more and more drivers are taking out their anger and frustration in their vehicles.

Crowded roads leave little room for error, leading to suspicion and hostility among drivers and encouraging them to take personally the mistakes of other drivers.

Aggressive driving is the act of operating a motor vehicle in a selfish, bold, or pushy manner, without regard for the rights or safety of others (i.e. changing lanes frequently and abruptly without notice)..

Road rage is operating a motor vehicle with the intent of doing harm to others or physically assaulting a driver or their vehicle.

2.10.2 – Don't Be an Aggressive Driver

How you feel before you even start your vehicle has a lot to do with how stress will affect you while driving.

- Reduce your stress before and while you drive. Listen to "easy listening" music.
- Give the drive your full attention. Don't allow yourself to become distracted by talking on your cell phone, eating, etc.
- Be realistic about your travel time. Expect delays because of traffic, construction, or bad weather and make allowances.
- If you're going to be later than you expected – deal with it. Take a deep breath and accept the delay.
- Give other drivers the benefit of the doubt. Try to imagine why he or she is driving that way. Whatever their reason, it has nothing to do with you.
- Slow down and keep your following distance reasonable.
- Don't drive slowly in the left lane of traffic.
- Avoid gestures. Keep your hands on the wheel. Avoid making any gestures that might anger another driver, even seemingly harmless expressions of irritation like shaking your head.
- Be a cautious and courteous driver. If another driver seems eager to get in front of you, say, "Be my guest." This response will soon become a habit and you won't be as offended by other drivers' actions.

2.10.3 – What You Should Do When Confronted by an Aggressive Driver

- First and foremost, make every attempt to get out of their way.
- Put your pride in the back seat. Do not challenge them by speeding up or attempting to hold-your-own in your travel lane.
- Avoid eye contact.
- Ignore gestures and refuse to react to them.
- Report aggressive drivers to the appropriate authorities by providing a vehicle description, license number, location and, if possible, direction of travel.
- If you have a cell phone, and can do it safely, call the police.
- If an aggressive driver is involved in a crash farther down the road, stop a safe distance from the crash scene, wait for the police to arrive, and report the driving behavior that you witnessed.

Subsections 2.9 and 2.10
Test Your Knowledge

1. What are some tips to follow so you won't become a distracted driver?
2. How do you use in-vehicle communications equipment cautiously?
3. How do you recognize a distracted driver?
4. What is the difference between aggressive driving and road rage?
5. What should you do when confronted with an aggressive driver?
6. What are some things you can do to reduce your stress before and while you drive?

These questions may be on the test. If you can't answer them all, re-read subsections 2.9 and 2.10.

2.11 – Driving at Night

2.11.1 – It's More Dangerous

You are at greater risk when you drive at night. Drivers can't see hazards as quickly as in daylight, so they have less time to respond. Drivers caught by surprise are less able to avoid a crash.

The problems of night driving involve the driver, the roadway, and the vehicle.

2.11.2 – Driver Factors

Vision. Good vision is critical for safe driving. Your control of the brake, accelerator, and steering wheel is based on what you see. If you cannot see clearly, you will have trouble identifying traffic and roadway conditions, spotting potential trouble or responding to problems in a timely manner.

Because seeing well is so critical to safe driving, you should have your eyes checked regularly by an eye specialist. You may never know you have poor vision unless your eyes are tested. If you

need to wear glasses or contact lenses for driving, remember to:

- Always wear them when driving, even if driving short distances. If your driver license says corrective lenses are required, it is illegal to move a vehicle without using corrective lenses.
- Keep an extra set of corrective lenses in your vehicle. If your normal corrective lenses are broken or lost, you can use the spare lenses to drive safely.
- Avoid using dark or tinted corrective lenses at night, even if you think they help with glare. Tinted lenses cut down the light that you need to see clearly under night driving conditions.

Glare. Drivers can be blinded for a short time by bright light. . It can take several seconds to recover from glare. Even two seconds of glare blindness can be dangerous. A vehicle going 55 mph will travel more than half the distance of a football field during that time.

Fatigue and Lack of Alertness. Fatigue is physical or mental tiredness that can be caused by physical or mental strain, repetitive tasks, illness or lack of sleep. Just like alcohol and drugs, it impairs your vision and judgment.

Fatigue causes errors related to speed and distance, increases your risk of being in a crash, causes you to not see and react to hazards as quickly; and affects your ability to make critical decisions. When you are fatigued, you could fall asleep behind the wheel and crash, injuring or killing yourself or others.

Fatigued or drowsy driving is one of the leading causes of traffic collisions. NHTSA estimates that 100,000 police-reported crashes a year are the result of drowsy driving. According to the National Sleep Foundation's Sleep in America poll, 60% of Americans have driven while feeling sleepy and more than one third (36 percent or 103 million people) admit to having actually fallen asleep at the wheel. Drivers may experience short bursts of sleep lasting only a few seconds or fall asleep for longer periods of time. Either way, the chance of a collision increases dramatically.

At-Risk Groups

The risk of having a crash due to drowsy driving is not uniformly distributed across the population. Crashes tend to occur at times when sleepiness is most pronounced, for example, during the night and in the mid-afternoon. Most people are less alert at night, especially after midnight. This is particularly true if you have been driving for a long time. Thus individuals who drive at night are much more likely to have fall-asleep crashes.

Research has identified young males, shift workers, commercial drivers, especially long-haul drivers and people with untreated sleep disorders or with short-term or chronic sleep deprivation as being at increased risk for having a fall-asleep crash. At least 15% of all heavy truck crashes involve fatigue.

A congressionally mandated study of 80 long-haul truck drivers in the United States and Canada found that drivers averaged less than 5 hours of sleep per day. (Federal Motor Carrier Safety Administration, 1996) It is no surprise then that the National Transportation Safety Board (NTSB) reported that drowsy driving was probably the cause of more than half of crashes leading to a truck driver's death. (NTSB, 1990) For each truck driver fatality, another three to four people are killed. (NHTSA, 1994)

Warning Signs of Fatigue

According to the National Sleep Foundation's Sleep in America poll, 60% of Americans have driven while feeling sleepy and 36% admit to actually having fallen asleep at the wheel in the past year. However, many people cannot tell if or when they are about to fall asleep. Here are some signs that should tell you to stop and rest:

- Difficulty focusing, frequent blinking or heavy eyelids
- Yawning repeatedly or rubbing eyes
- Day-dreaming; or wandering/disconnected thoughts
- Trouble remembering the last few miles driven; missing exits or traffic signs
- Trouble keeping head up
- Drifting from your lane, following too closely or hitting a shoulder rumble strip
- Feeling restless and irritable

When you are tired trying to "push on" is far more dangerous than most drivers think. It is a major cause of fatal accidents. If you notice any signs of fatigue, stop driving and go to sleep for the night or take a 15 – 20 minute nap.

Are You At Risk?

- Before you drive, consider whether you are:
- Sleep-deprived or fatigued (6 hours of sleep or less triples your risk)
- Suffering from sleep loss (insomnia), poor quality sleep, or a sleep debt
- Driving long distances without proper rest breaks

- Driving through the night, mid-afternoon or when you would normally be asleep. Many heavy motor vehicle accidents occur between midnight and 6 a.m.
- Taking sedating medications (antidepressants, cold tablets, antihistamines)
- Working more than 60 hours a week (increases your risk by 40%)
- Working more than one job, and your main job involves shift work
- Driving alone or on a long, rural, dark or boring road
- Flying, changing time zone

Preventing drowsiness before a trip:

- Get adequate sleep – adults need 8 to 9 hours to maintain alertness
- Prepare route carefully to identify total distance, stopping points and other logistic considerations
- Schedule trips for the hours you are normally awake, not the middle of the night
- Drive with a passenger
- Avoid medications that cause drowsiness
- Consult your physician if you suffer from daytime sleepiness, have difficulty sleeping at night or take frequent naps
- Incorporate exercise into your daily life to give you more energy.

Maintaining alertness while driving:

- Protect yourself from glare and eyestrain with sunglasses
- Keep cool by opening the window or using the air conditioner
- Avoid heavy foods
- Be aware of down time during the day
- Have another person ride with you, and take turns driving
- Take periodic breaks – about every 100 miles or 2 hours during long trips
- Stop driving and get some rest or take a nap
- Caffeine consumption can increase awareness for a few hours, but do not drink too much. It will eventually wear off. Do not rely on caffeine to prevent fatigue
- Avoid drugs. While they may keep you awake for a while, they won't make you alert.

If you are drowsy, the only safe cure is to get off the road and get some sleep. If you don't, you risk your life and the lives of others.

2.11.3 – Roadway Factors

Poor Lighting. In the daytime there is usually enough light to see well. This is not true at night. Some areas may have bright street lights, but many areas will have poor lighting. On most roads you will probably have to depend entirely on your headlights.

Less light means you will not be able to see hazards as well as in daytime. Road users who do not have lights are hard to see. There are many accidents at night involving pedestrians, joggers, bicyclists, and animals.

Even when there are lights, the road scene can be confusing. Traffic signals and hazards can be hard to see against a background of signs, shop windows, and other lights.

Drive slower when lighting is poor or confusing.

Drive slowly enough to be sure you can stop in the distance you can see ahead.

Drunk Drivers. Drunk drivers and drivers under the influence of drugs are a hazard to themselves and to you. Be especially alert around the closing times for bars and taverns. Watch for drivers who have trouble staying in their lane or maintaining speed, who stop without reason, or show other signs of being under the influence of alcohol or drugs.

2.11.4 – Vehicle Factors

Headlights. At night your headlights will usually be the main source of light for you to see by and for others to see you. You can't see nearly as much with your headlights as you see in the daytime. With low beams you can see ahead about 250 feet and with high beams about 350-500 feet. You must adjust your speed to keep your stopping distance within your sight distance. This means going slowly enough to be able to stop within the range of your headlights. Otherwise, by the time you see a hazard, you will not have time to stop.

Night driving can be more dangerous if you have problems with your headlights. Dirty headlights may give only half the light they should. This cuts down your ability to see, and makes it harder for others to see you. Make sure your lights are clean and working. Headlights can be out of adjustment. If they don't point in the right direction, they won't give you a good view and they can blind other drivers. Have a qualified person make sure they are adjusted properly.

Other Lights. In order for you to be seen easily, the following must be clean and working properly:

- Reflectors.
- Marker lights.
- Clearance lights.
- Taillights.
- Identification lights.

Turn Signals and Brake Lights. At night your turn signals and brake lights are even more important for telling other drivers what you intend to do. Make sure you have clean, working turn signals and stop lights.

Windshield and Mirrors. It is more important at night than in the daytime to have a clean windshield and clean mirrors. Bright lights at night can cause dirt on your windshield or mirrors to create a glare of its own, blocking your view. Most people have experienced driving toward the sun just as it has risen or is about to set, and found that they can barely see through a windshield that seemed to look OK in the middle of the day. Clean your windshield on the inside and outside for safe driving at night.

2.11.5 – Night Driving Procedures

Vehicle Procedures. Make sure you are rested and alert. If you are drowsy, sleep before you drive! Even a nap can save your life or the lives of others. If you wear eyeglasses, make sure they are clean and unscratched. Don't wear sunglasses at night. Do a complete Vehicle inspection of your vehicle. Pay attention to checking all lights and reflectors, and cleaning those you can reach.

Avoid Blinding Others. Glare from your headlights can cause problems for drivers coming toward you. They can also bother drivers going in the same direction you are, when your lights shine in their rearview mirrors. Dim your lights before they cause glare for other drivers. Dim your lights within 500 feet of an oncoming vehicle and when following another vehicle within 500 feet.

Avoid Glare from Oncoming Vehicles. Do not look directly at lights of oncoming vehicles. Look slightly to the right at a right lane or edge marking, if available. If other drivers don't put their low beams on, don't try to "get back at them" by putting your own high beams on. This increases glare for oncoming drivers and increases the chance of a crash.

Use High Beams When You Can. Some drivers make the mistake of always using low beams. This seriously cuts down on their ability to see ahead. Use high beams when it is safe and legal to do so. Use them when you are not within 500 feet of an approaching vehicle. Also, don't let the inside of your cab get too bright. This makes it harder to see outside. Keep the interior light off, and adjust your instrument lights as low as you can to still be able to read the gauges.

If You Get Sleepy, Stop at the Nearest Safe Place. People often don't realize how close they are to falling asleep even when their eyelids are falling shut. If you can safely do so, look at yourself in a mirror. If you look sleepy, or you just feel sleepy, stop driving! You are in a very dangerous condition. The only safe cure is to sleep.

2.12 – Driving in Fog

Fog can occur at any time. Fog on highways can be extremely dangerous. Fog is often unexpected, and visibility can deteriorate rapidly. You should watch for foggy conditions and be ready to reduce your speed. Do not assume that the fog will thin out after you enter it.

The best advice for driving in fog is don't. It is preferable that you pull off the road into a rest area or truck stop until visibility is better. If you must drive, be sure to consider the following:

- Obey all fog-related warning signs.
- Slow down before you enter fog.
- Use low-beam headlights and fog lights for best visibility even in daytime, and be alert for other drivers who may have forgotten to turn on their lights.
- Turn on your 4-way flashers. This will give vehicles approaching you from behind a quicker opportunity to notice your vehicle.
- Watch for vehicles on the side of the roadway. Seeing taillights or headlights in front of you may not be a true indication of where the road is ahead of you. The vehicle may not be on the road at all.
- Use roadside highway reflectors as guides to determine how the road may curve ahead of you.
- Listen for traffic you cannot see.
- Avoid passing other vehicles.
- Don't stop along the side of the road, unless absolutely necessary.

2.13 – Driving in Winter

2.13.1 – Vehicle Checks

Make sure your vehicle is ready before driving in winter weather. You should make a regular Vehicle inspection, paying extra attention to the following items.

Coolant Level and Antifreeze Amount. Make sure the cooling system is full and there is enough antifreeze in the system to protect against freezing. This can be checked **with a special coolant tester.**

Defrosting and Heating Equipment. Make sure the defrosters work. They are needed for safe driving. Make sure the heater is working, and that you know how to operate it. If you use other heaters and expect to need them (e.g., mirror heaters, battery box heaters, fuel tank heaters), check their operation.

Wipers and Washers. Make sure the windshield wiper blades are in good condition. Make sure the wiper blades press against the window hard enough to wipe the windshield clean, otherwise they may not sweep off snow properly. Make sure the windshield washer works and there is washing fluid in the washer reservoir.

Use windshield washer antifreeze to prevent freezing of the washer liquid. If you can't see well enough while driving (for example, if your wipers fail), stop safely and fix the problem.

Tires. Make sure you have enough tread on your tires. The drive tires must provide traction to push the rig over wet pavement and through snow. The steering tires must have traction to steer the vehicle. Enough tread is especially important in winter conditions. You must have at least 4/32 inch tread depth in every major groove on front tires and at least 2/32 inch on other tires. More would be better. Use a gauge to determine if you have enough tread for safe driving.

Tire Chains. You may find yourself in conditions where you can't drive without chains, even to get to a place of safety. Carry the right number of chains and extra cross-links. Make sure they will fit your drive tires. Check the chains for broken hooks, worn or broken cross-links, and bent or broken side chains. Learn how to put the chains on before you need to do it in snow and ice.

Lights and Reflectors. Make sure the lights and reflectors are clean. Lights and reflectors are especially important during bad weather. Check from time to time during bad weather to make sure they are clean and working properly.

Windows and Mirrors. Remove any ice, snow, etc., from the windshield, windows, and mirrors before starting. Use a windshield scraper, snow brush, and windshield defroster as necessary.

Hand Holds, Steps, and Deck Plates. Remove all ice and snow from hand holds, steps, and deck plates. This will reduce the danger of slipping.

Radiator Shutters and Winterfront. Remove ice from the radiator shutters. Make sure the winterfront is not closed too tightly. If the shutters freeze shut or the winterfront is closed too much, the engine may overheat and stop.

Exhaust System. Exhaust system leaks are especially dangerous when cab ventilation may be poor (windows rolled up, etc.). Loose connections could permit poisonous carbon monoxide to leak into your vehicle. Carbon monoxide gas will cause you to be sleepy. In large enough amounts it can kill you. Check the exhaust system for loose parts and for sounds and signs of leaks.

2.13.2 – Driving

Slippery Surfaces. Drive slowly and smoothly on slippery roads. If it is very slippery, you shouldn't drive at all. Stop at the first safe place.

Start Gently and Slowly. When first starting, get the feel of the road. Don't hurry.

Check for Ice. Check for ice on the road, especially bridges and overpasses. A lack of spray from other vehicles indicates ice has formed on the road. Also, check your mirrors and wiper blades for ice. If they have ice, the road most likely will be icy as well.

Adjust Turning and Braking to Conditions. Make turns as gently as possible. Don't brake any harder than necessary, and don't use the engine brake or speed retarder. (They can cause the driving wheels to skid on slippery surfaces.)

Adjust Speed to Conditions. Don't pass slower vehicles unless necessary. Go slowly and watch far enough ahead to keep a steady speed. Avoid having to slow down and speed up. Take curves at slower speeds and don't brake while in curves. Be aware that as the temperature rises to the point where ice begins to melt, the road becomes even more slippery. Slow down more.

Adjust Space to Conditions. Don't drive alongside other vehicles. Keep a longer following distance. When you see a traffic jam ahead, slow down or stop to wait for it to clear. Try hard to anticipate stops early and slow down gradually. Watch for snowplows, as well as salt and sand trucks, and give them plenty of room.

Wet Brakes. When driving in heavy rain or deep standing water, your brakes will get wet. Water in the brakes can cause the brakes to be weak, to apply unevenly, or to grab. This can cause lack of braking power, wheel lockups, pulling to one side or the other, and jackknife if you pull a trailer.

Avoid driving through deep puddles or flowing water if possible. If not, you should:

Slow down and place transmission in a low gear.

Gently put on the brakes. This presses linings against brake drums or discs and keeps mud, silt, sand, and water from getting in.

Increase engine rpm and cross the water while keeping light pressure on the brakes.

When out of the water, maintain light pressure on the brakes for a short distance to heat them up and dry them out.

Make a test stop when safe to do so. Check behind to make sure no one is following, then apply the brakes to be sure they work well. If not, dry them out further as described above. (CAUTION: Do not apply too much brake pressure and accelerator at the same time, or you can overheat brake drums and linings.

2.14 – Driving in Very Hot Weather

2.14.1 – Vehicle Checks

Do a normal Vehicle inspection, but pay special attention to the following items.

Tires. Check the tire mounting and air pressure. Inspect the tires every two hours or every 100 miles when driving in very hot weather. Air pressure increases with temperature. Do not let air out or the pressure will be too low when the tires cool off. If a tire is too hot to touch, remain stopped until the tire cools off. Otherwise the tire may blow out or catch fire.

Engine Oil. The engine oil helps keep the engine cool, as well as lubricating it. Make sure there is enough engine oil. If you have an oil temperature gauge, make sure the temperature is within the proper range while you are driving.

Engine Coolant. Before starting out, make sure the engine cooling system has enough water and antifreeze according to the engine manufacturer's directions. (Antifreeze helps the engine under hot conditions as well as cold conditions.) When driving, check the water temperature or coolant temperature gauge from time to time. Make sure that it remains in the normal range. If the gauge goes above the highest safe temperature, there may be something wrong that could lead to engine failure and possibly fire. Stop driving as soon as safely possible and try to find out what is wrong.

Some vehicles have sight glasses, see-through coolant overflow containers, or coolant recovery containers. These permit you to check the coolant level while the engine is hot. If the container is not part of the pressurized system, the cap can be safely removed and coolant added even when the engine is at operating temperature.

Never remove the radiator cap or any part of the pressurized system until the system has cooled. Steam and boiling water can spray under pressure and cause severe burns. If you can touch the radiator cap with your bare hand, it is probably cool enough to open.

If coolant has to be added to a system without a recovery tank or overflow tank, follow these steps:

- Shut engine off.
- Wait until engine has cooled.
- Protect hands (use gloves or a thick cloth).
- Turn radiator cap slowly to the first stop, which releases the pressure seal.
- Step back while pressure is released from cooling system.
- When all pressure has been released, press down on the cap and turn it further to remove it.
- Visually check level of coolant and add more coolant if necessary.
- Replace cap and turn all the way to the closed position.

Engine Belts. Learn how to check v-belt tightness on your vehicle by pressing on the belts. Loose belts will not turn the water pump and/or fan properly. This will result in overheating. Also, check belts for cracking or other signs of wear.

Hoses. Make sure coolant hoses are in good condition. A broken hose while driving can lead to engine failure and even fire.

2.14.2 – Driving

Watch for Bleeding Tar. Tar in the road pavement frequently rises to the surface in very hot weather. Spots where tar "bleeds" to the surface are very slippery.

Go Slowly Enough to Prevent Overheating. High speeds create more heat for tires and the engine. In desert conditions the heat may build up to the point where it is dangerous. The heat will increase chances of tire failure or even fire, and engine failure.

Subsections 2.11, 2.12, 2.13, and 2.14
Test Your Knowledge

1. You should use low beams whenever you can. True or False?
2. What should you do before you drive if you are drowsy?
3. What effects can wet brakes cause? How can you avoid these problems?
4. You should let air out of hot tires so the pressure goes back to normal. True or False?
5. You can safely remove the radiator cap as long as the engine isn't overheated. True or False?

These questions may be on the test. If you can't answer all of them, re-read subsections 2.11, 2.12, 2.13, and 2.14.

2.15 – Railroad-highway Crossings

Railroad-highway grade crossings are a special kind of intersection where the roadway crosses train tracks. These crossings are always dangerous. Every such crossing must be approached with the expectation that a train is coming. It is extremely difficult to judge the distance of the train from the crossing as well as the speed of an approaching train.

2.15.1 – Types of Crossings

Passive Crossings. This type of crossing does not have any type of traffic control device. The decision to stop or proceed rests entirely in your hands. Passive crossings require you to recognize the crossing, search for any train using the tracks and decide if there is sufficient clear space to cross safely.

Active Crossings. This type of crossing has a traffic control device installed at the crossing to regulate traffic at the crossing. These active devices include flashing red lights, with or without bells and flashing red lights with bells and gates.

2.15.2 – Warning Signs and Devices

Advance Warning Signs. The round, black-on-yellow warning sign is placed ahead of a public railroad-highway crossing. The advance warning sign tells you to slow down, look and listen for the train, and be prepared to stop at the tracks if a train is coming. All passenger and hazmat carrying vehicles are required to stop. See Figure 2.15.

Figure 2.15

Pavement Markings. Pavement markings mean the same as the advance warning sign. They consist of an "X" with the letters ""RR" and a no-passing marking on two-lane roads. See Figure 2.16.

Figure 2.16

There is also a no passing zone sign on two-lane roads. There may be a white stop line painted on the pavement before the railroad tracks. The front of the school bus must remain behind this line while stopped at the crossing.

Cross-buck Signs. This sign marks the grade crossing. It requires you to yield the right-of-way to the train. If there is no white stop line painted on the pavement, vehicles that are required to stop must stop no closer than 15 feet or more than 50 feet from the nearest rail of the nearest track. When the road crosses over more than one track, a sign below the cross-buck indicates the number of tracks. See Figure 2.17.

Figure 2.17

Flashing Red Light Signals. At many highway-rail grade crossings, the cross-buck sign has flashing red lights and bells. When the lights begin to flash, stop! A train is approaching. You are required to yield the right-of-way to the train. If there is more than one track, make sure all tracks are clear before crossing. See Figure 2.18.

Gates. Many railroad-highway crossings have gates with flashing red lights and bells. Stop when the lights begin to flash and before the gate lowers across the road lane. Remain stopped until the gates go up and the lights have stopped flashing. Proceed when it is safe. See Figure 2.18.

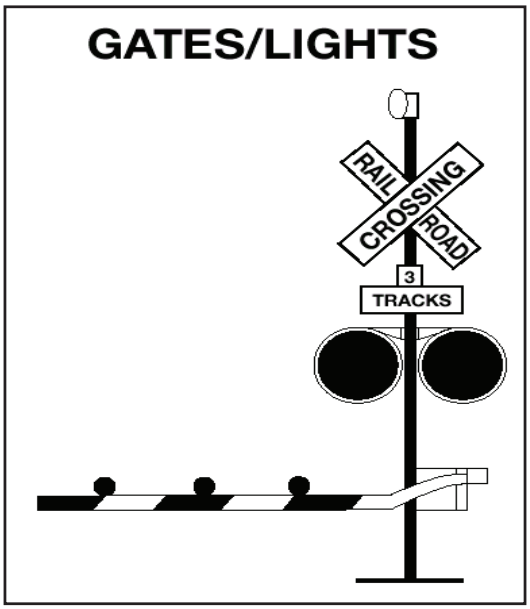

Figure 2.18

2.15.3 – Driving Procedures

Never Race a Train to a Crossing. Never attempt to race a train to a crossing. It is extremely difficult to judge the speed of an approaching train.

Reduce Speed. Speed must be reduced in accordance with your ability to see approaching trains in any direction, and speed must be held to a point which will permit you to stop short of the tracks in case a stop is necessary.

Don't Expect to Hear a Train. Trains may not or are prohibited from sounding horns when approaching some crossings. Public crossings where trains do not sound horns should be identified by signs. Noise inside your vehicle may, also prevent you from hearing the train horn until the train is dangerously close to the crossing.

Don't Rely on Signals. You should not rely solely upon the presence of warning signals, gates, or flagmen to warn of the approach of trains. Be especially alert at crossings that do not have gates or flashing red light signals.

Double Tracks Require a Double Check. Remember that a train on one track may hide a train on the other track. Look both ways before crossing. After one train has cleared a crossing, be sure no other trains are near before starting across the tracks.

Yard Areas and Grade Crossings in Cities and Towns. Yard areas and grade crossings in cities and towns are just as dangerous as rural grade crossings. Approach them with as much caution.

2.15.4 – Stopping Safely at Railroad-highway Crossings

A full stop is required at grade crossings whenever:

- The nature of the cargo makes a stop mandatory under state or federal regulations.
- Such a stop is otherwise required by law.

When stopping be sure to:

- Check for traffic behind you while stopping gradually. Use a pullout lane, if available.
- Turn on your four-way emergency flashers.

2.15.5 – Crossing the Tracks

Railroad crossings with steep approaches can cause your unit to hang up on the tracks.

Never permit traffic conditions to trap you in a position where you have to stop on the tracks. Be sure you can get all the way across the tracks before you start across. It takes a typical tractor-trailer unit at least 14 seconds to clear a single track and more than 15 seconds to clear a double track.

Do not shift gears while crossing railroad tracks.

2.15.6 – Special Situations

Be Aware! These trailers can get stuck on raised crossings:

- Low slung units (lowboy, car carrier, moving van, possum-belly livestock trailer).
- Single-axle tractor pulling a long trailer with its landing gear set to accommodate a tandem-axle tractor.

If for any reason you get stuck on the tracks, get out of the vehicle and away from the tracks. Check signposts or signal housing at the crossing for emergency notification information. Call 911 or other emergency number. Give the location of the crossing using all identifiable landmarks, especially the DOT number, if posted.

2.16 – Mountain Driving

In mountain driving, gravity plays a major role. On any upgrade, gravity slows you down. The steeper the grade, the longer the grade, and/or the heavier the load--the more you will have to use lower gears to climb hills or mountains. In coming down long, steep downgrades, gravity causes the speed of your vehicle to increase. You must select an appropriate safe speed, then use a low gear, and proper braking techniques. You should plan ahead and obtain information about any long, steep grades along your planned route of travel. If possible, talk to other drivers who are familiar with the grades to find out what speeds are safe.

You must go slowly enough so your brakes can hold you back without getting too hot. If the brakes become too hot, they may start to "fade." This means you have to apply them harder and harder to get the same stopping power. If you continue to use the brakes hard, they can keep fading until you cannot slow down or stop at all.

2.16.1 – Select a "Safe" Speed

Your most important consideration is to select a speed that is not too fast for the:

- Total weight of the vehicle and cargo.
- Length of the grade.
- Steepness of the grade.
- Road conditions.
- Weather.

If a speed limit is posted, or there is a sign indicating "Maximum Safe Speed," never exceed the speed shown. Also, look for and heed warning signs indicating the length and steepness of the grade.

You must use the braking effect of the engine as the principal way of controlling your speed. The braking effect of the engine is greatest when it is near the governed rpms and the transmission is in the lower gears. Save your brakes so you will be able to slow or stop as required by road and traffic conditions.

2.16.2 – Select the Right Gear before Starting Down the Grade

Shift the transmission to a low gear before starting down the grade. Do not try to downshift after your speed has already built up. You will not be able to shift into a lower gear. You may not even be able to get back into any gear and all engine braking effect will be lost. Forcing an automatic transmission into a lower gear at high speed could damage the transmission and also lead to loss of all engine braking effect.

With older trucks, a rule for choosing gears is to use the same gear going down a hill that you would need to climb the hill. However, new trucks have low friction parts and streamlined shapes for fuel economy. They may also have more powerful engines. This means they can go up hills in higher gears and have less friction and air drag to hold them back going down hills. For that reason, drivers of modern trucks may have to use lower gears going down a hill than would be required to go up the hill. You should know what is right for your vehicle.

2.16.3 – Brake Fading or Failure

Brakes are designed so brake shoes or pads rub against the brake drum or disks to slow the vehicle. Braking creates heat, but brakes are designed to take a lot of heat. However, brakes can fade or fail from excessive heat caused by using them too much and not relying on the engine braking effect.

Brake fade is also affected by adjustment. To safely control a vehicle, every brake must do its share of the work. Brakes out of adjustment will stop doing their share before those that are in adjustment. The other brakes can then overheat and fade, and there will not be enough braking available to control the vehicle. Brakes can get out of adjustment quickly, especially when they are used a lot; also, brake linings wear faster when they are hot. Therefore, brake adjustment must be checked frequently.

2.16.4 – Proper Braking Technique

Remember. The use of brakes on a long and/or steep downgrade is only a supplement to the braking effect of the engine. Once the vehicle is in the proper low gear, the following are the proper braking techniques:

- Apply the brakes just hard enough to feel a definite slowdown.
- When your speed has been reduced to approximately five mph below your "safe" speed, release the brakes. (This brake application should last for about three seconds.)
- When your speed has increased to your "safe" speed, repeat steps 1 and 2.

For example, if your "safe" speed is 40 mph, you would not apply the brakes until your speed reaches 40 mph. You now apply the brakes hard enough to gradually reduce your speed to 35 mph and then release the brakes. Repeat this as often as necessary until you have reached the end of the downgrade.

Escape ramps have been built on many steep mountain downgrades. Escape ramps are made to stop runaway vehicles safely without injuring drivers and passengers. Escape ramps use a long bed of loose, soft material to slow a runaway vehicle, sometimes in combination with an upgrade.

Know escape ramp locations on your route. Signs show drivers where ramp are located. Escape ramps save lives, equipment and cargo.

Subsections 2.15 and 2.16
Test Your Knowledge

1. What factors determine your selection of a "safe" speed when going down a long, steep downgrade?
2. Why should you be in the proper gear before starting down a hill?
3. Describe the proper braking technique when going down a long, steep downgrade.
4. What type of vehicles can get stuck on a railroad-highway crossing?
5. How long does it take for a typical tractor-trailer unit to clear a double track?

These questions may be on the test. If you can't answer them all, re-read subsections 2.15 and 2.16.

2.17 – Driving Emergencies

Traffic emergencies occur when two vehicles are about to collide. Vehicle emergencies occur when tires, brakes, or other critical parts fail. Following the safety practices in this manual can help prevent emergencies. But if an emergency does happen, your chances of avoiding a crash depend upon how well you take action. Actions you can take are discussed below.

2.17.1 – Steering to Avoid a Crash

Stopping is not always the safest thing to do in an emergency. When you don't have enough room to stop, you may have to steer away from what's ahead. Remember, you can almost always turn to miss an obstacle more quickly than you can stop. (However, top-heavy vehicles and tractors with multiple trailers may flip over.)

Keep Both Hands on the Steering Wheel. In order to turn quickly, you must have a firm grip on the steering wheel with both hands. The best way to have both hands on the wheel, if there is an emergency, is to keep them there all the time.

How to Turn Quickly and Safely. A quick turn can be made safely, if it's done the right way. Here are some points that safe drivers use:

- Do not apply the brake while you are turning. It's very easy to lock your wheels while turning. If that happens, you may skid out of control.
- Do not turn any more than needed to clear whatever is in your way. The more sharply you turn, the greater the chances of a skid or rollover.

- Be prepared to "counter-steer," that is, to turn the wheel back in the other direction, once you've passed whatever was in your path. Unless you are prepared to counter-steer, you won't be able to do it quickly enough. You should think of emergency steering and counter-steering as two parts of one driving action.

Where to Steer. If an oncoming driver has drifted into your lane, a move to your right is best. If that driver realizes what has happened, the natural response will be to return to his or her own lane.

If something is blocking your path, the best direction to steer will depend on the situation.

- If you have been using your mirrors, you'll know which lane is empty and can be safely used.
- If the shoulder is clear, going right may be best. No one is likely to be driving on the shoulder but someone may be passing you on the left. You will know if you have been using your mirrors.
- If you are blocked on both sides, a move to the right may be best. At least you won't force anyone into an opposing traffic lane and a possible head-on collision.

Leaving the Road. In some emergencies, you may have to drive off the road. It may be less risky than facing a collision with another vehicle.

Most shoulders are strong enough to support the weight of a large vehicle and, therefore, offer an available escape route. Here are some guidelines, if you do leave the road.

Avoid Braking. If possible, avoid using the brakes until your speed has dropped to about 20 mph. Then brake very gently to avoid skidding on a loose surface.

Keep One Set of Wheels on the Pavement, if Possible. This helps to maintain control.

Stay on the Shoulder. If the shoulder is clear, stay on it until your vehicle has come to a stop. Signal and check your mirrors before pulling back onto the road.

Returning to the Road. If you are forced to return to the road before you can stop, use the following procedure:

Hold the wheel tightly and turn sharply enough to get right back on the road safely. Don't try to edge gradually back on the road. If you do, your tires might grab unexpectedly and you could lose control.

When both front tires are on the paved surface, counter-steer immediately. The two turns should be made as a single "steer-counter-steer" move.

2.17.2 – How to Stop Quickly and Safely

If somebody suddenly pulls out in front of you, your natural response is to hit the brakes. This is a good response if there's enough distance to stop, and you use the brakes correctly.

You should brake in a way that will keep your vehicle in a straight line and allow you to turn if it becomes necessary. You can use the "controlled braking" method or the "stab braking" method.

Controlled Braking. With this method, you apply the brakes as hard as you can without locking the wheels. Keep steering wheel movements very small while doing this. If you need to make a larger steering adjustment or if the wheels lock, release the brakes. Re-apply the brakes as soon as you can.

Stab Braking. With this method**,** you apply your brakes all the way and release brakes when wheels lock up. As soon as the wheels start rolling, apply the brakes fully again. (It can take up to one second for the wheels to start rolling after you release the brakes. If you re-apply the brakes before the wheels start rolling, the vehicle won't straighten out.)

Don't Jam on the Brakes. Emergency braking does not mean pushing down on the brake pedal as hard as you can. That will only keep the wheels locked up and cause a skid. If the wheels are skidding, you cannot control the vehicle.

2.17.3 – Brake Failure

Brakes kept in good condition rarely fail. Most hydraulic brake failures occur for one of two reasons: (Air brakes are discussed in Section 5.)

- Loss of hydraulic pressure.
- Brake fade on long hills.

Loss of Hydraulic Pressure. When the system won't build up pressure, the brake pedal will feel spongy or go to the floor. Here are some things you can do.

Downshift. Putting the vehicle into a lower gear will help to slow the vehicle.

Pump the Brakes. Sometimes pumping the brake pedal will generate enough hydraulic pressure to stop the vehicle.

Use the Parking Brake. The parking or emergency brake is separate from the hydraulic brake system. Therefore, it can be used to slow the vehicle.

However, be sure to press the release button or pull the release lever at the same time you use the emergency brake so you can adjust the brake pressure and keep the wheels from locking up.

Find an Escape Route. While slowing the vehicle, look for an escape route--an open field, side-street, or escape ramp. Turning uphill is a good way to slow and stop the vehicle. Make sure the vehicle does not start rolling backward after you stop. Put it in low gear, apply the parking brake, and, if necessary, roll back into some obstacle that will stop the vehicle.

Brake Failure on Downgrades. Going slow enough and braking properly will almost always prevent brake failure on long downgrades. Once the brakes have failed, however, you are going to have to look outside your vehicle for something to stop it.

Your best hope is an escape ramp. If there is one, there'll be signs telling you about it. Use it. Ramps are usually located a few miles from the top of the downgrade. Every year, hundreds of drivers avoid injury to themselves or damage to their vehicles by using escape ramps. Some escape ramps use soft gravel that resists the motion of the vehicle and brings it to a stop. Others turn uphill, using the hill to stop the vehicle and soft gravel to hold it in place.

Any driver who loses brakes going downhill should use an escape ramp if it's available. If you don't use it, your chances of having a serious crash may be much greater.

If no escape ramp is available, take the least hazardous escape route you can--such as an open field or a side road that flattens out or turns uphill. Make the move as soon as you know your brakes don't work. The longer you wait, the faster the vehicle will go, and the harder it will be to stop.

2.17.4 – Tire Failure

Recognize Tire Failure. Quickly knowing you have a tire failure will let you have more time to react. Having just a few extra seconds to remember what it is you're supposed to do can help you. The major signs of tire failure are:

- **Sound.** The loud "bang" of a blowout is an easily recognized sign. Because it can take a few seconds for your vehicle to react, you might think it was some other vehicle. But any time you hear a tire blow, you'd be safest to assume it is yours.
- **Vibration.** If the vehicle thumps or vibrates heavily, it may be a sign that one of the tires has gone flat. With a rear tire, that may be the only sign you get.
- **Feel.** If the steering feels "heavy," it is probably a sign that one of the front tires has failed. Sometimes, failure of a rear tire will cause the vehicle to slide back and forth or "fishtail." However, dual rear tires usually prevent this.

Respond to Tire Failure. When a tire fails, your vehicle is in danger. You must immediately:

- **Hold the Steering Wheel Firmly.** If a front tire fails, it can twist the steering wheel out of your hand. The only way to prevent this is to keep a firm grip on the steering wheel with both hands at all times.
- **Stay off the Brake.** It's natural to want to brake in an emergency. However, braking when a tire has failed could cause loss of control. Unless you're about to run into something, stay off the brake until the vehicle has slowed down. Then brake very gently, pull off the road, and stop.
- **Check the Tires.** After you've come to a stop, get out and check all the tires. Do this even if the vehicle seems to be handling all right. If one of your dual tires goes, the only way you may know it is by getting out and looking at it.

2.18 – Antilock Braking Systems (ABS)

ABS is a computerized system that keeps your wheels from locking up during hard brake applications.

ABS is an addition to your normal brakes. It does not decrease or increase your normal braking capability. ABS only activates when wheels are about to lock up.

ABS does not necessarily shorten your stopping distance, but it does help you keep the vehicle under control during hard braking.

2.18.1 – How Antilock Braking Systems Work

Sensors detect potential wheel lock up. An electronic control unit (ECU) will then decrease brake pressure to avoid wheel lockup.

Brake pressure is adjusted to provide the maximum braking without danger of lockup.

ABS works far faster than the driver can respond to potential wheel lockup. At all other times the brake system will operate normally.

2.18.2 – Vehicles Required to Have Antilock Braking Systems

The Department of Transportation requires that ABS be on:

- Truck tractors with air brakes built on or after March 1, 1997.
- Other air brake vehicles, (trucks, buses, trailers, and converter dollies) built on or after March 1, 1998.
- Hydraulically braked trucks and buses with a gross vehicle weight rating of 10,000 lbs or more built on or after March 1, 1999.

Many commercial vehicles built before these dates have been voluntarily equipped with ABS.

2.18.3 – How to Know If Your Vehicle Is Equipped with ABS

Tractors, trucks, and buses will have yellow ABS malfunction lamps on the instrument panel.

Trailers will have yellow ABS malfunction lamps on the left side, either on the front or rear corner.

Dollies manufactured on or after March 1, 1998, are required to have a lamp on the left side.

As a system check on newer vehicles, the malfunction lamp comes on at start-up for a bulb check, and then goes out quickly. On older systems, the lamp could stay on until you are driving over five mph.

If the lamp stays on after the bulb check, or goes on once you are under way, you may have lost ABS control.

In the case of towed units manufactured before it was required by the Department of Transportation, it may be difficult to tell if the unit is equipped with ABS. Look under the vehicle for the ECU and wheel speed sensor wires coming from the back of the brakes.

2.18.4 – How ABS Helps You

When you brake hard on slippery surfaces in a vehicle without ABS, your wheels may lock up. When your steering wheels lock up, you lose steering control. When your other wheels lock up, you may skid, jackknife, or even spin the vehicle.

ABS helps you avoid wheel lock up and maintain control. You may or may not be able to stop faster with ABS, but you should be able to steer around an obstacle while braking, and avoid skids caused by over braking.

2.18.5 – ABS on the Tractor Only or Only on the Trailer

Having ABS on only the tractor, only the trailer, or even on only one axle, still gives you more control over the vehicle during braking. Brake normally.

When only the tractor has ABS, you should be able to maintain steering control, and there is less chance of jackknifing. But keep your eye on the trailer and let up on the brakes (if you can safely do so) if it begins to swing out.

When only the trailer has ABS, the trailer is less likely to swing out, but if you lose steering control or start a tractor jackknife, let up on the brakes (if you can safely do so) until you regain control.

2.18.6 – Braking with ABS

When you drive a vehicle with ABS, you should brake as you always have. In other words:

- Use only the braking force necessary to stop safely and stay in control.
- Brake the same way, regardless of whether you have ABS on the bus, tractor, the trailer, or both.
- As you slow down, monitor your tractor and trailer and back off the brakes (if it is safe to do so) to stay in control.

There is only one exception to this procedure. If you drive a straight truck or combination with working ABS on all axles, in an emergency stop, you can fully apply the brakes.

2.18.7 – Braking If ABS Is Not Working

Without ABS you still have normal brake functions. Drive and brake as you always have.

Vehicles with ABS have yellow malfunction lamps to tell you if something isn't working.

As a system check on newer vehicles, the malfunction lamp comes on at start-up for a bulb check and then goes out quickly. On older systems, the lamp could stay on until you are driving over five mph.

If the lamp stays on after the bulb check, or goes on once you are under way, you may have lost ABS control on one or more wheels.

Remember, if your ABS malfunctions, you still have regular brakes. Drive normally, but get the system serviced soon.

2.18.8 – Safety Reminders

- **ABS won't allow you to drive faster**, follow more closely, or drive less carefully.
- **ABS won't prevent power or turning skids**–ABS should prevent brake-induced skids or jackknifes, but not those caused by spinning the drive wheels or going too fast in a turn.
- **ABS won't necessarily shorten stopping distance**. ABS will help maintain vehicle control, but not always shorten stopping distance.
- **ABS won't increase or decrease ultimate stopping power**–ABS is an "add-on" to your normal brakes, not a replacement for them.
- **ABS won't change the way you normally brake.** Under normal brake conditions, your vehicle will stop as it always stopped. ABS only comes into play when a wheel would normally have locked up because of over braking.
- **ABS won't compensate for bad brakes or poor brake maintenance.**
- **Remember**: The best vehicle safety feature is still a safe driver.
- **Remember:** Drive so you never need to use your ABS.
- **Remember:** If you need it, ABS could help to prevent a serious crash

2.19 – Skid Control and Recovery

A skid happens whenever the tires lose their grip on the road. This is caused in one of four ways:

- **Over-braking.** Braking too hard and locking up the wheels. Skids also can occur when using the speed retarder when the road is slippery.
- **Over-steering.** Turning the wheels more sharply than the vehicle can turn.
- **Over-acceleration.** Supplying too much power to the drive wheels, causing them to spin.
- **Driving Too Fast.** Most serious skids result from driving too fast for road conditions. Drivers who adjust their driving to conditions don't over-accelerate and don't have to over-brake or over-steer from too much speed.

2.19.1 – Drive-wheel Skids

By far the most common skid is one in which the rear wheels lose traction through excessive braking or acceleration. Skids caused by acceleration usually happen on ice or snow. Taking your foot off the accelerator can easily stop them. (If it is very slippery, push the clutch in. Otherwise, the engine can keep the wheels from rolling freely and regaining traction.)

Rear wheel braking skids occur when the rear drive wheels lock. Because locked wheels have less traction than rolling wheels, the rear wheels usually slide sideways in an attempt to "catch up" with the front wheels. In a bus or straight truck, the vehicle will slide sideways in a "spin out." With vehicles towing trailers, a drive-wheel skid can let the trailer push the towing vehicle sideways, causing a sudden jackknife. See Figure 2.19.

2.19.2 – Correcting a Drive-wheel Braking Skid

Do the following to correct a drive-wheel braking skid.

- **Stop Braking.** This will let the rear wheels roll again, and keep the rear wheels from sliding.
- **Counter-steer.** As a vehicle turns back on course, it has a tendency to keep on turning. Unless you turn the steering wheel quickly the other way, you may find yourself skidding in the opposite direction.

Learning to stay off the brake, turn the steering wheel quickly, push in the clutch, and counter-steer in a skid takes a lot of practice. The best place to get this practice is on a large driving range or "skid pad."

2.19.3 – Front-wheel Skids

Driving too fast for conditions causes most front-wheel skids. Other causes include lack of tread on the front tires and cargo loaded so not enough weight is on the front axle. In a front-wheel skid, the front end tends to go in a straight line regardless of how much you turn the steering wheel. On a very slippery surface, you may not be able to steer around a curve or turn.

When a front-wheel skid occurs, the only way to stop the skid is to let the vehicle slow down. Stop turning and/or braking so hard. Slow down as quickly as possible without skidding.

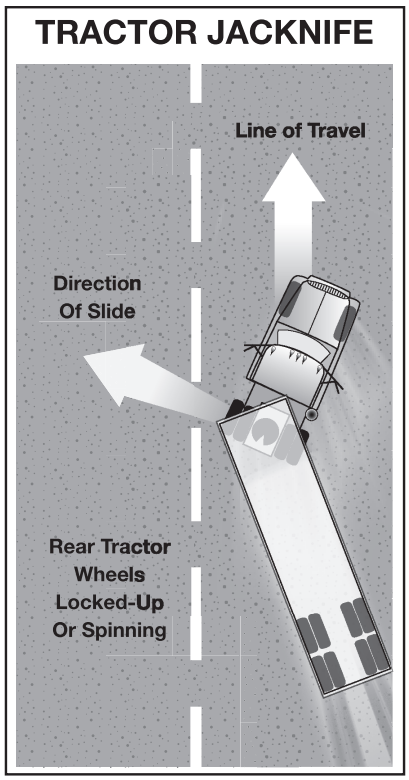

Figure 2.19

Subsections 2.17, 2.18, and 2.19
Test Your Knowledge

1. Stopping is not always the safest thing to do in an emergency. True or False?
2. What are some advantages of going right instead of left around an obstacle?
3. What is an "escape ramp?"
4. If a tire blows out, you should put the brakes on hard to stop quickly. True or False?
5. How do you know if your vehicle has antilock brakes?
6. What is the proper braking technique when driving a vehicle with antilock brakes?
7. How do antilock brakes help you?

These questions may be on the test. If you can't answer them all, re-read subsections 2.17, 2.18, and 2.19.

2.20 – Accident Procedures

When you're in an accident and not seriously hurt, you need to act to prevent further damage or injury. The basic steps to be taken at any accident are to:

- Protect the area.
- Notify authorities.
- Care for the injured.

2.20.1 – Protect the Area

The first thing to do at an accident scene is to keep another accident from happening in the same spot. To protect the accident area:

- If your vehicle is involved in the accident, try to get it to the side of the road. This will help prevent another accident and allow traffic to move.
- If you're stopping to help, park away from the accident. The area immediately around the accident will be needed for emergency vehicles.
- Put on your flashers.
- Set out reflective triangles to warn other traffic. Make sure other drivers can see them in time to avoid the accident.

2.20.2 – Notify Authorities

If you have a cell phone or CB, call for assistance before you get out of your vehicle. If not, wait until after the accident scene has been properly protected, then phone or send someone to phone the police. Try to determine where you are so you can give the exact location.

2.20.3 – Care for the Injured

If a qualified person is at the accident and helping the injured, stay out of the way unless asked to assist. Otherwise, do the best you can to help any injured parties. Here are some simple steps to follow in giving assistance:

- Don't move a severely injured person unless the danger of fire or passing traffic makes it necessary.
- Stop heavy bleeding by applying direct pressure to the wound.
- Keep the injured person warm.

2.21 – Fires

Truck fires can cause damage and injury. Learn the causes of fires and how to prevent them. Know what to do to extinguish fires.

2.21.1 – Causes of Fire

The following are some causes of vehicle fires:

- **After Accidents.** Spilled fuel, improper use of flares.
- **Tires.** Under-inflated tires and duals that touch.
- **Electrical System.** Short circuits due to damaged insulation, loose connections.
- **Fuel.** Driver smoking, improper fueling, loose fuel connections.
- **Cargo.** Flammable cargo, improperly sealed or loaded cargo, poor ventilation.

2.21.2 – Fire Prevention

Pay attention to the following:

- **Vehicle Inspection**. Make a complete inspection of the electrical, fuel, and exhaust systems, tires, and cargo. Be sure to check that the fire extinguisher is charged.
- **En Route Inspection.** Check the tires, wheels, and truck body for signs of heat whenever you stop during a trip.
- **Follow Safe Procedures.** Follow correct safety procedures for fueling the vehicle, using brakes, handling flares, and other activities that can cause a fire.
- **Monitoring.** Check the instruments and gauges often for signs of overheating and use the mirrors to look for signs of smoke from tires or the vehicle.
- **Caution.** Use normal caution in handling anything flammable.

2.21.3 – Fire Fighting

Knowing how to fight fires is important. Drivers who didn't know what to do have made fires worse. Know how the fire extinguisher works. Study the instructions printed on the extinguisher before you need it. Here are some procedures to follow in case of fire.

Pull Off the Road. The first step is to get the vehicle off the road and stop. In doing so:

- Park in an open area, away from buildings, trees, brush, other vehicles, or anything that might catch fire.
- Don't pull into a service station!
- Notify emergency services of your problem and your location.

Keep the Fire from Spreading. Before trying to put out the fire, make sure that it doesn't spread any further.

- **With an engine fire**, turn off the engine as soon as you can. Don't open the hood if you can avoid it. Shoot foam through louvers, radiator, or from the vehicle's underside.
- **For a cargo fire in a van or box trailer**, keep the doors shut, especially if your cargo contains hazardous materials. Opening the van doors will supply the fire with oxygen and can cause it to burn very fast.

Extinguish the Fire. Here are some rules to follow in putting out a fire:

- When using the extinguisher, stay as far away from the fire as possible.
- Aim at the source or base of the fire, not up in the flames.

Use the Right Fire Extinguisher

- Figures 2.20 and 2.21 detail the type of fire extinguisher to use by class of fire.
- The B:C type fire extinguisher is designed to work on electrical fires and burning liquids.
- The A:B:C type is designed to work on burning wood, paper, and cloth as well.
- Water can be used on wood, paper, or cloth, but don't use water on an electrical fire (can cause shock) or a gasoline fire (it will spread the flames).
- A burning tire must be cooled. Lots of water may be required.
- If you're not sure what to use, especially on a hazardous materials fire, wait for firefighters.
- Position yourself upwind. Let the wind carry the extinguisher to the fire.
- Continue until whatever was burning has been cooled. Absence of smoke or flame does not mean the fire cannot restart.

Class/Type of Fires	
Class	**Type**
A	*Wood, Paper, Ordinary Combustibles* **Extinguish by Cooling and Quenching Using Water or Dry Chemicals**
B	*Gasoline, Oil, Grease, Other Greasy Liquids* **Extinguish by Smothering, Cooling or Heat Shielding using carbon Dioxide or Dry Chemicals**
C	*Electrical Equipment Fires* **Extinguish with Non-conducting Agents such as Carbon Dioxide or Dry Chemicals. DO NOT USE WATER.**
D	*Fires in Combustible Metals* **Extinguish by Using Specialized Extinguishing Powders**

Figure 2.20

Class of Fire/Type of Extinguisher	
Class of Fire	**Fire Extinguisher Type**
B or C	Regular Dry Chemical
A, B, C, or D	Multi-Purpose Dry Chemical
D	Purple K Dry Chemical
B or C	KCL Dry Chemical
D	Dry Powder Special Compound
B or C	Carbon Dioxide (Dry)
B or C	Halogenated Agent (Gas)
A	Water
A	Water With Anti-Freeze
A or B	Water, Loaded Steam Style
B, On Some A	Foam

Figure 2.21

Subsections 2.20 and 2.21 Test Your Knowledge

1. What are some things to do at an accident scene to prevent another accident?
2. Name two causes of tire fires.
3. What kinds of fires is a B:C extinguisher not good for?
4. When using your extinguisher, should you get as close as possible to the fire?
5. Name some causes of vehicle fires.

These questions may be on the test. If you can't answer them all, re-read subsections 2.20 and 2.21.

2.22 – Alcohol, Other Drugs, and Driving

2.22.1 – Alcohol and Driving

Drinking alcohol and then driving is very dangerous and a serious problem. People who drink alcohol are involved in traffic accidents resulting in over 20,000 deaths every year. Alcohol impairs muscle coordination, reaction time, depth perception, and night vision. It also affects the parts of the brain that control judgment and inhibition. For some people, one drink is all it takes to show signs of impairment.

How Alcohol Works. Alcohol goes directly into the blood stream and is carried to the brain. After passing through the brain, a small percentage is removed in urine, perspiration, and by breathing, while the rest is carried to the liver. The liver can only process one-third an ounce of alcohol per hour, which is considerably less than the alcohol in a standard drink. This is a fixed rate, so only time, not black coffee or a cold shower, will sober you up. If you have drinks faster than your body can get rid of them, you will have more alcohol in your body, and your driving will be more affected. The Blood Alcohol Concentration (BAC) commonly measures the amount of alcohol in your body. See Figure 2.22.

What Is a Drink?

It is the alcohol in drinks that affects human performance. It doesn't make any difference whether that alcohol comes from "a couple of beers," or from two glasses of wine, or two shots of hard liquor.

Approximate Blood Alcohol Content

Drinks	Body Weight in Pounds								Effects
	100	120	140	160	180	200	220	240	
0	.00	.00	.00	.00	.00	.00	.00	.00	Only Safe Driving Limit
1	.04	.03	.03	.02	.02	.02	.02	.02	Impairment Begins
2	.08	.06	.05	.05	.04	.04	.03	.03	Driving Skills Significantly Affected Criminal Penalties
3	.11	.09	.08	.07	.06	.06	.05	.05	
4	.15	.12	.11	.09	.08	.08	.07	.06	
5	.19	.16	.13	.12	.11	.09	.09	.08	
6	.23	.19	.16	.14	.13	.11	.10	.09	
7	.26	.22	.19	.16	.15	.13	.12	.11	Legally Intoxicated Criminal Penalties
8	.30	.25	.21	.19	.17	.15	.14	.13	
9	.34	.28	.24	.21	.19	.17	.15	.14	
10	.38	.31	.27	.23	.21	.19	.17	.16	

Subtract .01% for each 40 minutes of drinking. One drink is 1.5 oz. of 80 proof liquor, 12 oz. of beer, or 5 oz. of table wine.

Figure 2.22

All of the following drinks contain the same amount of alcohol:

All of the following drinks contain the same amount of alcohol:

- A 12-ounce glass of 5% beer.
- A 5-ounce glass of 12% wine.
- A 1 1/2-ounce shot of 80 proof liquor.

What Determines Blood Alcohol Concentration? BAC is determined by the amount of alcohol you **What Determines Blood Alcohol Concentration?** BAC is determined by the amount of alcohol you drink (more alcohol means higher BAC), how fast you drink (faster drinking means higher BAC), and your weight (a small person doesn't have to drink as much to reach the same BAC).

Alcohol and the Brain. Alcohol affects more and more of the brain as BAC builds up. The first part of the brain affected controls judgment and self-control. One of the bad things about this is it can keep drinkers from knowing they are getting drunk. And, of course, good judgment and self-control are absolutely necessary for safe driving.

As BAC continues to build up, muscle control, vision, and coordination are affected more and more. Effects on driving may include:

- Straddling lanes.
- Quick, jerky starts.
- Not signaling, failure to use lights.
- Running stop signs and red lights.
- Improper passing (See Figure 2.23).

These effects mean increased chances of a crash and chances of losing your driver's license. Accident statistics show that the chance of a crash is much greater for drivers who have been drinking than for drivers who have not.

How Alcohol Affects Driving. All drivers are affected by drinking alcohol. Alcohol affects judgment, vision, coordination, and reaction time. It causes serious driving errors, such as:

- Increased reaction time to hazards.
- Driving too fast or too slow.
- Driving in the wrong lane.
- Running over the curb.
- Weaving.

Effects Of Increasing Blood Alcohol Content		
Blood Alcohol Content is the amount of alcohol in your blood recorded in milligrams of alcohol per 100 milliliters of blood. Your BAC depends on the amount of blood (which increases with weight) and the amount of alcohol you consume over time (how fast you drink). The faster you drink, the higher your BAC, as the liver can only handle about one drink per hour—the rest builds up in your blood.		
BAC	**Effects on Body**	**Effects on Driving Condition**
.02	Mellow feeling, slight body warmth.	Less inhibited.
.05	Noticeable relaxation.	Less alert, less self-focused, coordination impairment begins.
.08	Definite impairment in coordination & judgment	Drunk driving limit, impaired coordination & judgment.
.10*	Noisy, possible embarrassing behavior, mood swings.	Reduction in reaction time.
.15	Impaired balance & movement, clearly drunk.	Unable to drive.
.30	Many lose consciousness.	
.40	Most lose consciousness, some die.	
.50	Breathing stops, many die.	
BAC of .10 means that 1/10 of 1 % (or 1/1000) of your total blood content is alcohol.		

Figure 2.23

2.22.2 – Other Drugs

Besides alcohol, other legal and illegal drugs are being used more often. Laws prohibit possession or use of many drugs while on duty. They prohibit being under the influence of any "controlled substance," amphetamines (including "pep pills," "uppers," and "bennies"), narcotics, or any other substance, which can make the driver unsafe. This could include a variety of prescription and over-the-counter drugs (cold medicines), which may make the driver drowsy or otherwise affect safe driving ability. However, possession and use of a drug given to a driver by a doctor is permitted if the doctor informs the driver that it will not affect safe driving ability.

Pay attention to warning labels for legitimate drugs and medicines, and to doctor's orders regarding possible effects. Stay away from illegal drugs.

Don't use any drug that hides fatigue--the only cure for fatigue is rest. Alcohol can make the effects of other drugs much worse. The safest rule is don't mix drugs with driving at all.

Use of drugs can lead to traffic accidents resulting in death, injury, and property damage. Furthermore, it can lead to arrest, fines, and jail sentences. It can also mean the end of a person's driving career.

2.22.3 – Illness

Once in a while, you may become so ill that you cannot operate a motor vehicle safely. If this happens to you, you must not drive. However, in case of an emergency, you may drive to the nearest place where you can safely stop.

2.23 – Hazardous Materials Rules For All Commercial Drivers

All drivers should know something about hazardous materials. You must be able to recognize hazardous cargo, and you must know whether or not you can haul it without having a hazardous materials endorsement on your CDL license.

2.23.1 – What Are Hazardous Materials?

Hazardous materials are products that pose a risk to health, safety, and property during transportation. See Figure 2.24.

2.23.2 – Why Are There Rules?

You must follow the many rules about transporting hazardous materials. The intent of the rules is to:

- Contain the product.
- Communicate the risk.
- Ensure safe drivers and equipment.

To Contain the Product. Many hazardous products can injure or kill on contact. To protect drivers and others from contact, the rules tell shippers how to package safely. Similar rules tell drivers how to load, transport, and unload bulk tanks. These are containment rules.

To Communicate the Risk. The shipper uses a shipping paper and diamond shaped hazard labels to warn dockworkers and drivers of the risk.

Hazard Class Definitions		
Class	**Class Name**	**Example**
1	Explosives	Ammunition, Dynamite, Fireworks
2	Gases	Propane, Oxygen, Helium
3	Flammable	Gasoline, Acetone
4	Flammable Solids	Matches, Fuses
5	Oxidizers	Ammonium Nitrate, Hydrogen Peroxide
6	Poisons	Pesticides, Arsenic
7	Radioactive	Uranium, Plutonium
8	Corrosives	Hydrochloric Acid, Battery Fluid
9	Miscellaneous Hazardous Materials	Formaldehyde, Asbestos
None	ORM-D (Other Regulated Material-Domestic)	Hair Spray or Charcoal
None	Combustible Liquids	Fuel Oils, Lighter Fluid

Figure 2.24

After an accident or hazardous material spill or leak, you may be injured and unable to communicate the hazards of the materials you are transporting. Firefighters and police can prevent or reduce the amount of damage or injury at the scene if they know what hazardous materials are being transported. Your life, and the lives of others, may depend on quickly locating the hazardous materials shipping papers. For that reason, you must identify shipping papers related to hazardous materials or keep them on top of other shipping papers. You must also keep shipping papers:

- In a pouch on the driver's door, or
- In clear view within reach while driving, or
- On the driver's seat when out of the vehicle.

2.23.3 – Lists of Regulated Products

Placards are used to warn others of hazardous materials. Placards are signs put on the outside of a vehicle that identify the hazard class of the cargo. A placarded vehicle must have at least four identical placards. They are put on the front, rear, and both sides. Placards must be readable from all four directions. They must be at least 9.8" (250mm) inches square, turned upright on a point, in a diamond shape. Cargo tanks and other bulk packaging display the identification number of their contents on placards or orange panels.

Identification Numbers are a four digit code used by first responders to identify hazardous materials. An identification number may be used to identify more than one chemical on shipping papers. The identification number will be preceded by the letters "NA" or "UN". The US DOT Emergency Response Guidebook (ERG) lists the chemicals and the identification numbers assigned to them.

Not all vehicles carrying hazardous materials need to have placards. The rules about placards are given in Section 9 of this manual. You can drive a vehicle that carries hazardous materials if it does not require placards. If it requires placards, you cannot drive it unless your driver license has the hazardous materials endorsement. See Figure 2.25.

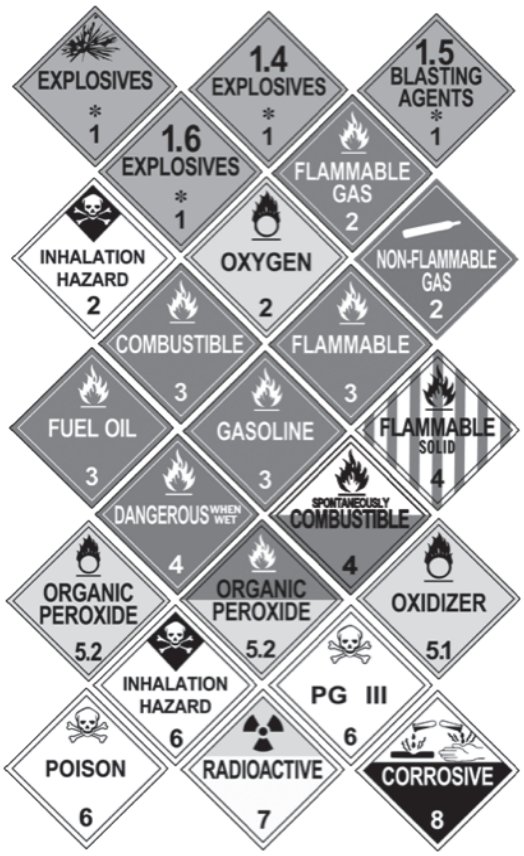

Figure 2.25

The rules require all drivers of placarded vehicles to learn how to safely load and transport hazardous products. They must have a commercial driver license with the hazardous materials endorsement. To get the required endorsement, you must pass a written test on material found in Section 9 of this manual. A tank endorsement is required for any commercial vehicle that is designed to transport any liquid or gaseous materials in a tank or tanks having an individual rated capacity of more than 119

gallons and an aggregate capacity of 1,000 gallons or more that is either permanently or temporarily attached to the vehicle or chassis. The liquid or gas does not have to be a hazardous material.

Drivers who need the hazardous materials endorsement must learn the placard rules. If you do not know if your vehicle needs placards, ask your employer. Never drive a vehicle needing placards unless you have the hazardous materials endorsement. To do so is a crime. When stopped, you will be cited and you will not be allowed to drive your truck. It will cost you time and money. A failure to placard when needed may risk your life and others if you have an accident. Emergency help will not know of your hazardous cargo.

Hazardous materials drivers must also know which products they can load together, and which they cannot. These rules are also in Section 9. Before loading a truck with more than one type of product, you must know if it is safe to load them together. If you do not know, ask your employer and consult the regulations.

Subsections 2.22 and 2.23 Test Your Knowledge

1. Common medicines for colds can make you sleepy. True or False?
2. Coffee and a little fresh air will help a drinker sober up. True or False?
3. What is a hazardous materials placard?
4. Why are placards used?

These questions may be on the test. If you can't answer them all, re-read subsections 2.22 and 2.23.

Section 3
TRANSPORTING CARGO SAFELY

This Section Covers

- **Inspecting Cargo**
- **Cargo Weight and Balance**
- **Securing Cargo**
- **Cargo Needing Special Attention**

This section tells you about hauling cargo safely. You must understand basic cargo safety rules to get a CDL.

If you load cargo wrong or do not secure it, it can be a danger to others and yourself. Loose cargo that falls off a vehicle can cause traffic problems and others could be hurt or killed. Loose cargo could hurt or kill you during a quick stop or crash. Your vehicle could be damaged by an overload. Steering could be affected by how a vehicle is loaded, making it more difficult to control the vehicle.

Whether or not you load and secure the cargo yourself, you are responsible for:

- Inspecting your cargo.
- Recognizing overloads and poorly balanced weight.
- Knowing your cargo is properly secured and does not obscure your view ahead or to the sides.
- Knowing your cargo does not restrict your access to emergency equipment.

If you intend to carry hazardous material that requires placards on your vehicle, you will also need to have a hazardous materials endorsement. Section 9 of this manual has the information you need to pass the hazardous materials test.

3.1 – Inspecting Cargo

As part of your Vehicle inspection, make sure the truck is not overloaded and the cargo is balanced and secured properly.

After Starting. Inspect the cargo and its securing devices again within the first 50 miles after beginning a trip. Make any adjustments needed.

Re-check. Re-check the cargo and securing devices as often as necessary during a trip to keep the load secure. You need to inspect again:

- After you have driven for 3 hours or 150 miles.
- After every break you take during driving.

Federal, state, and local regulations for commercial vehicle weight, securing cargo, covering loads, and where you can drive large vehicles vary from place to place. Know the rules where you will be driving.

3.2 – Weight and Balance

You are responsible for not being overloaded. The following are some definitions of weight you should know.

3.2.1 – Definitions You Should Know

Gross Vehicle Weight Rating (GVWR). The value specified by the manufacturer as the loaded weight of a single vehicle.

Gross Combination Weight Rating (GCWR). The value specified by the manufacturer of the power unit, if the value is displayed on the Federal Motor Vehicle Safety Standard (FMVSS) certification label; or the sum of the gross vehicle weight ratings (GVWRs) ***or the gross vehicle weights (GVWs)*** of the power unit and the towed unit(s), or any combination thereof, that produces the highest value.

(The underlined and italicized text above is for use by roadside enforcement only to determine whether the driver/vehicle is subject to CDL regulations. It is not used to determine whether a vehicle is representative for the purposes of Skills testing).

Axle Weight. The weight transmitted to the ground by one axle or one set of axles.

Tire Load. The maximum safe weight a tire can carry at a specified pressure. This rating is stated on the side of each tire.

Suspension Systems. Suspension systems have a manufacturer's weight capacity rating.

Coupling Device Capacity. Coupling devices are rated for the maximum weight they can pull and/or carry.

3.2.2 – Legal Weight Limits

You must keep weights within legal limits. States have maximums for GVWRs, GCWRs, and axle weights. Often, maximum axle weights are set by a bridge formula. A bridge formula permits less maximum axle weight for axles that are closer together. This is to prevent overloading bridges and roadways.

Overloading can have bad effects on steering, braking, and speed control. Overloaded trucks have to go very slowly on upgrades. Worse, they may gain too much speed on downgrades. Stopping distance increases. Brakes can fail when forced to work too hard.

During bad weather or in mountains, it may not be safe to operate at legal maximum weights. Take this into account before driving.

3.2.3 – Don't Be Top-heavy

The height of the vehicle's center of gravity is very important for safe handling. A high center of gravity (cargo piled up high or heavy cargo on top) means you are more likely to tip over. It is most dangerous in curves, or if you have to swerve to avoid a hazard. It is very important to distribute the cargo so it is as low as possible. Put the heaviest parts of the cargo under the lightest parts.

3.2.4 – Balance the Weight

Poor weight balance can make vehicle handling unsafe. Too much weight on the steering axle can cause hard steering. It can damage the steering axle and tires. Under-loaded front axles (caused by shifting weight too far to the rear) can make the steering axle weight too light to steer safely. Too little weight on the driving axles can cause poor traction. The drive wheels may spin easily. During bad weather, the truck may not be able to keep going. Weight that is loaded so there is a high center of gravity causes greater chance of rollover. On flat bed vehicles, there is also a greater chance that the load will shift to the side or fall off. See Figure 3.1.

3.3 – Securing Cargo

3.3.1 – Blocking and Bracing

Blocking is used in the front, back, and/or sides of a piece of cargo to keep it from sliding. Blocking is shaped to fit snugly against cargo. It is secured to the cargo deck to prevent cargo movement. Bracing is also used to prevent movement of cargo. Bracing goes from the upper part of the cargo to the floor and/or walls of the cargo compartment.

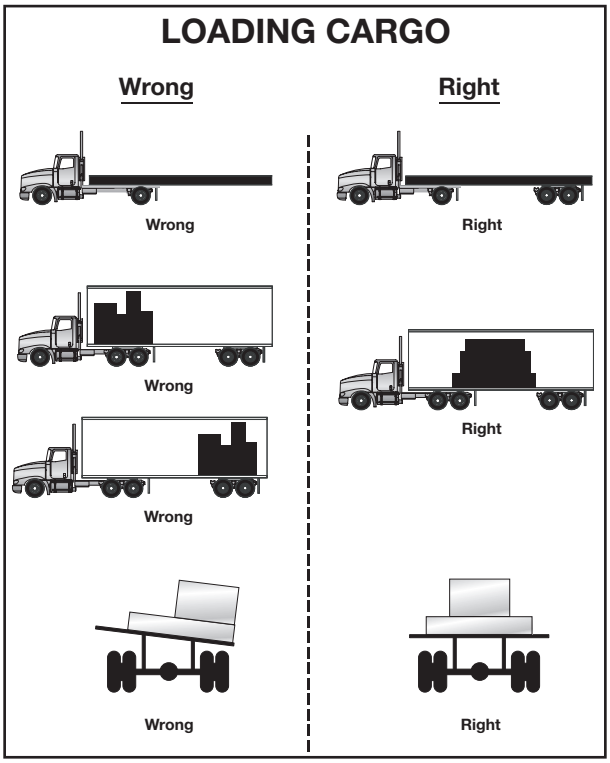

Figure 3.1

3.3.2 – Cargo Tie-down

On flatbed trailers or trailers without sides, cargo must be secured to keep it from shifting or falling off. In closed vans, tie-downs can also be important to prevent cargo shifting that may affect the handling of the vehicle. Tie-downs must be of the proper type and proper strength. Federal regulations require the aggregate working load limit of any securement system used to secure an article or group of articles against movement must be at least one-half times the weight of the article or group of articles. Proper tie-down equipment must be used, including ropes, straps, chains, and tensioning devices (winches, ratchets, clinching components). Tie-downs must be attached to the vehicle correctly (hooks, bolts, rails, rings). See figure 3.2.

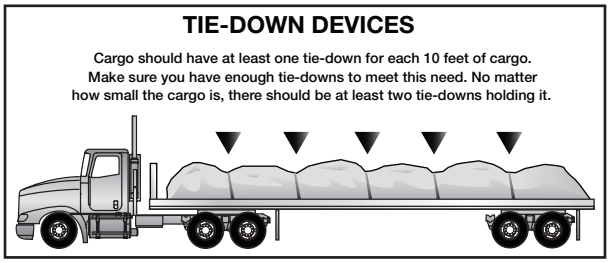

Figure 3.2

Cargo should have at least one tie-down for each ten feet of cargo. Make sure you have enough tie-downs to meet this need. No matter how small the cargo, it should have at least two tie-downs.

There are special requirements for securing various heavy pieces of metal. Find out what they are if you are to carry such loads.

3.3.3 – Header Boards

Front-end header boards ("headache racks") protect you from your cargo in case of a crash or emergency stop. Make sure the front-end structure is in good condition. The front-end structure should block the forward movement of any cargo you carry.

3.3.4 – Covering Cargo

There are two basic reasons for covering cargo:

- To protect people from spilled cargo.
- To protect the cargo from weather.

Spill protection is a safety requirement in many states. Be familiar with the laws in the states you drive in.

You should look at your cargo covers in the mirrors from time to time while driving. A flapping cover can tear loose, uncovering the cargo, and possibly block your view or someone else's.

3.3.5 – Sealed and Containerized Loads

Containerized loads generally are used when freight is carried part way by rail or ship. Delivery by truck occurs at the beginning and/or end of the journey. Some containers have their own tiedown devices or locks that attach directly to a special frame. Others have to be loaded onto flatbed trailers. They must be properly secured just like any other cargo.

You cannot inspect sealed loads, but you should check that you don't exceed gross weight and axle weight limits.

3.4 – Cargo Needing Special Attention

3.4.1 – Dry Bulk

Dry bulk tanks require special care because they have a high center of gravity, and the load can shift. Be extremely cautious (slow and careful) going around curves and making sharp turns.

3.4.2 – Hanging Meat

Hanging meat (suspended beef, pork, lamb) in a refrigerated truck can be a very unstable load with a high center of gravity. Particular caution is needed on sharp curves such as off ramps and on ramps. Go slowly.

3.4.3 – Livestock

Livestock can move around in a trailer, causing unsafe handling. With less than a full load, use false bulkheads to keep livestock bunched together. Even when bunched, special care is necessary because livestock can lean on curves. This shifts the center of gravity and makes rollover more likely.

3.4.4 – Oversized Loads

Over-length, over-width, and/or overweight loads require special transit permits. Driving is usually limited to certain times. Special equipment may be necessary such as "wide load" signs, flashing lights, flags, etc. Such loads may require a police escort or pilot vehicles bearing warning signs and/or flashing lights. These special loads require special driving care.

Section 3
Test Your Knowledge

1. What four things related to cargo are drivers responsible for?
2. How often must you stop while on the road to check your cargo?
3. How is Gross Combination Weight Rating different from Gross Combination Weight?
4. Name two situations where legal maximum weights may not be safe.
5. What can happen if you don't have enough weight on the front axle?
6. What is the minimum number of tie-downs for any flatbed load?
7. What is the minimum number of tie-downs for a 20-foot load?
8. Name the two basic reasons for covering cargo on an open bed.
9. What must you check before transporting a sealed load?

These questions may be on your test. If you can't answer them all, re-read Section 3.

Section 4
TRANSPORTING PASSENGERS SAFELY

This Section Covers

- **Vehicle Inspection**
- **Loading**
- **On the Road**
- **After-trip Vehicle Inspection**
- **Prohibited Practices**
- **Use of Brake-door Interlocks**

Bus drivers must have a commercial driver license if they drive a vehicle designed to seat more than 16 or more persons, including the driver.

Bus drivers must have a passenger endorsement on their commercial driver license. To get the endorsement you must pass a knowledge test on Sections 2 and 4 of this manual. (If your bus has air brakes, you must also pass a knowledge test on Section 5.) You must also pass the skills tests required for the class of vehicle you drive.

4.1 – Vehicle Inspection

Before driving your bus, you must be sure it is safe. You must review the inspection report made by the previous driver. Only if defects reported earlier have been certified as repaired or not needed to be repaired, should you sign the previous driver's report. This is your certification that the defects reported earlier have been fixed.

4.1.1 – Vehicle Systems

Make sure these things are in good working order before driving:

- Service brakes, including air hose couplings (if your bus has a trailer or semitrailer).
- Parking brake.
- Steering mechanism.
- Lights and reflectors.
- Tires (front wheels must not have recapped or re-grooved tires).
- Horn.
- Windshield wiper or wipers.
- Rear-vision mirror or mirrors.
- Coupling devices (if present).
- Wheels and rims.
- Emergency equipment.

Make sure your bus has the fire extinguisher and emergency reflectors (3 reflective triangles or at least 6 fusees or 3 liquid burning flares) required by law. The bus must also have spare electrical fuses, unless equipped with circuit breakers.

4.1.2 – Access Doors and Panels

As you check the outside of the bus, close any open emergency exits. Also, close any open access panels (for baggage, restroom service, engine, etc.) before driving.

4.1.3 – Bus Interior

People sometimes damage unattended buses. Always check the interior of the bus before driving to ensure rider safety. Aisles and stairwells should always be clear. The following parts of your bus must be in safe working condition:

- Each handhold and railing.
- Floor covering.
- Signaling devices, including the restroom emergency buzzer, if the bus has a restroom.
- Emergency exit handles.

The seats must be safe for riders. All seats must be securely fastened to the bus.

Never drive with an open emergency exit door or window. The "Emergency Exit" sign on an emergency door must be clearly visible. If there is a red emergency door light, it must work. Turn it on at night or any other time you use your outside lights.

4.1.4 – Roof Hatches

You may lock some emergency roof hatches in a partly open position for fresh air. Do not leave them open as a regular practice. Keep in mind the bus's higher clearance while driving with them open.

4.1.5 – Use Your Seatbelt!

The driver's seat should have a seat belt. Always use it for safety.

4.2 – Loading and Trip Start

Do not allow riders to leave carry-on baggage in a doorway or aisle. There should be nothing in the aisle that might trip other riders. Secure baggage and freight in ways that avoid damage and:

- Allow the driver to move freely and easily.
- Allow riders to exit by any window or door in an emergency.
- Protect riders from injury if carry-ons fall or shift.

4.2.1 – Hazardous Materials

Watch for cargo or baggage containing hazardous materials. Most hazardous materials cannot be carried on a bus.

The Federal Hazardous Materials Table shows which materials are hazardous. They pose a risk to health, safety, and property during transportation. The rules require shippers to mark containers of hazardous material with the material's name, identification number, and hazard label. There are nine different four-inch, diamond-shaped hazard labels. See Figure 4.1. Watch for the diamond-shaped labels. Do not transport any hazardous material unless you are sure the rules allow it.

Hazard Class Definitions		
Class	**Class Name**	**Example**
1	Explosives	Ammunition, Dynamite, Fireworks
2	Gases	Propane, Oxygen, Helium
3	Flammable	Gasoline Fuel, Acetone
4	Flammable Solids	Matches, Fuses
5	Oxidizers	Ammonium Nitrate, Hydrogen Peroxide
6	Poisons	Pesticides, Arsenic
7	Radioactive	Uranium, Plutonium
8	Corrosives	Hydrochloric Acid, Battery Acid
9	Miscellaneous Hazardous Materials	Formaldehyde, Asbestos
None	ORM-D (Other Regulated Material-Domestic)	Hair Spray or Charcoal
None	Combustible Liquids	Fuel Oils, Lighter Fluid

Figure 4.1

4.2.2 – Forbidden Hazardous Materials

Buses may carry small-arms ammunition labeled ORM-D, emergency hospital supplies, and drugs. You can carry small amounts of some other hazardous materials if the shipper cannot send them any other way. Buses must never carry:

- Division 2.3 poison gas, liquid Class 6 poison, tear gas, irritating material.
- More than 100 pounds of solid Class 6 poisons.
- Explosives in the space occupied by people, except small arms ammunition.
- Labeled radioactive materials in the space occupied by people.
- More than 500 pounds total of allowed hazardous materials, and no more than 100 pounds of any one class.

Riders sometimes board a bus with an unlabeled hazardous material. Do not allow riders to carry on common hazards such as car batteries or gasoline.

4.2.3 – Standee Line

No rider may stand forward of the rear of the driver's seat. Buses designed to allow standing must have a two-inch line on the floor or some other means of showing riders where they cannot stand. This is called the standee line. All standing riders must stay behind it.

4.2.4 – At Your Destination

When arriving at the destination or intermediate stops announce:

- The location.
- Reason for stopping.
- Next departure time.
- Bus number.

Remind riders to take carry-ons with them if they get off the bus. If the aisle is on a lower level than the seats, remind riders of the step-down. It is best to tell them before coming to a complete stop.

Charter bus drivers should not allow riders on the bus until departure time. This will help prevent theft or vandalism of the bus.

4.3 – On the Road

4.3.1 – Passenger Supervision

Many charter and intercity carriers have passenger comfort and safety rules. Mention rules about smoking, drinking, or use of radio and tape players at the start of the trip. Explaining the rules at the start will help to avoid trouble later on.

While driving, scan the interior of your bus as well as the road ahead, to the sides, and to the rear. You may have to remind riders about rules, or to keep arms and heads inside the bus.

4.3.2 – At Stops

Riders can stumble when getting on or off, and when the bus starts or stops. Caution riders to watch their step when leaving the bus. Wait for them to sit down or brace themselves before starting. Starting and stopping should be as smooth as possible to avoid rider injury.

Occasionally, you may have a drunk or disruptive rider. You must ensure this rider's safety as well as that of others. Don't discharge such riders where it would be unsafe for them. It may be safer at the next scheduled stop or a well-lighted area where there are other people. Many carriers have guidelines for handling disruptive riders.

4.3.3 – Common Accidents

The Most Common Bus Accidents. Bus accidents often happen at intersections. Use caution, even if a signal or stop sign controls other traffic. School and mass transit buses sometimes scrape off mirrors or hit passing vehicles when pulling out from a bus stop. Remember the clearance your bus needs, and watch for poles and tree limbs at stops. Know the size of the gap your bus needs to accelerate and merge with traffic. Wait for the gap to open before leaving the stop. Never assume other drivers will brake to give you room when you signal or start to pull out.

4.3.4 – Speed on Curves

Crashes on curves that kill people and destroy buses result from excessive speed, often when rain or snow has made the road slippery. Every banked curve has a safe "design speed." In good weather, the posted speed is safe for cars but it may be too high for many buses. With good traction, the bus may roll over; with poor traction, it might slide off the curve. Reduce speed for curves! If your bus leans toward the outside on a banked curve, you are driving too fast.

4.3.5 – Railroad-highway Crossing/ Stops

Stop at RR Crossings:

- Stop your bus between 15 and 50 feet before railroad crossings.
- Listen and look in both directions for trains. You should open your forward door if it improves your ability to see or hear an approaching train.
- Before crossing after a train has passed, make sure there isn't another train coming in the other direction on other tracks.
- If your bus has a manual transmission, never change gears while crossing the tracks.
- You do not have to stop, but must slow down and carefully check for other vehicles:
- At streetcar crossings.
- Where a policeman or flagman is directing traffic.
- If a traffic signal is green.
- At crossings marked as "exempt" or "abandoned."

4.3.6 – Drawbridges

Stop at Drawbridges. Stop at drawbridges that do not have a signal light or traffic control attendant. Stop at least 50 feet before the draw of the bridge. Look to make sure the draw is completely closed before crossing. You do not need to stop, but must slow down and make sure it's safe, when:

There is a traffic light showing green.

The bridge has an attendant or traffic officer who controls traffic whenever the bridge opens.

4.4 – After-trip Vehicle Inspection

Inspect your bus at the end of each shift. If you work for an interstate carrier, you must complete a written inspection report for each bus driven. The report must specify each bus and list any defect that would affect safety or result in a breakdown. If there are no defects, the report should say so.

Riders sometimes damage safety-related parts such as handholds, seats, emergency exits, and windows. If you report this damage at the end of a shift, mechanics can make repairs before the bus goes out again. Mass transit drivers should also make sure passenger signaling devices and brake-door interlocks work properly.

4.5 – Prohibited Practices

Avoid fueling your bus with riders on board unless absolutely necessary. Never refuel in a closed building with riders on board.

Don't talk with riders, or engage in any other distracting activity, while driving.

Do not tow or push a disabled bus with riders aboard the vehicle, unless getting off would be unsafe. Only tow or push the bus to the nearest safe spot to discharge passengers. Follow your employer's guidelines on towing or pushing disabled buses.

4.6 – Use of Brake-door Interlocks

Urban mass transit coaches may have a brake and accelerator interlock system. The interlock applies the brakes and holds the throttle in idle position when the rear door is open. The interlock releases when you close the rear door. Do not use this safety feature in place of the parking brake.

Section 4
Test Your Knowledge

1. Name some things to check in the interior of a bus during a Vehicle inspection.
2. What are some hazardous materials you can transport by bus?
3. What are some hazardous materials you can't transport by bus?
4. What is a standee line?
5. Does it matter where you make a disruptive passenger get off the bus?
6. How far from a railroad crossing should you stop?
7. When must you stop before crossing a drawbridge?
8. Describe from memory the "prohibited practices" listed in the manual.
9. The rear door of a transit bus has to be open to put on the parking brake. True or False?

These questions may be on your test. If you can't answer them all, re-read Section 4.

Section 5
AIR BRAKES

This Section Covers

- **Air Brake System Parts**
- **Dual Air Brake Systems**
- **Inspecting Air Brakes**
- **Using Air Brakes**

This section tells you about air brakes. If you want to drive a truck or bus with air brakes, or pull a trailer with air brakes, you need to read this section. If you want to pull a trailer with air brakes, you also need to read Section 6, Combination Vehicles.

Air brakes use compressed air to make the brakes work. Air brakes are a good and safe way of stopping large and heavy vehicles, but the brakes must be well maintained and used properly.

Air brakes are really three different braking systems: service brake, parking brake, and emergency brake.

- The service brake system applies and releases the brakes when you use the brake pedal during normal driving.
- The parking brake system applies and releases the parking brakes when you use the parking brake control.
- The emergency brake system uses parts of the service and parking brake systems to stop the vehicle in a brake system failure.

The parts of these systems are discussed in greater detail below.

5.1 – The Parts of an Air Brake System

There are many parts to an air brake system. You should know about the parts discussed here.

5.1.1 – Air Compressor

The air compressor pumps air into the air storage tanks (reservoirs). The air compressor is connected to the engine through gears or a v-belt. The compressor may be air cooled or may be cooled by the engine cooling system. It may have its own oil supply or be lubricated by engine oil. If the compressor has its own oil supply, check the oil level before driving.

5.1.2 – Air Compressor Governor

The governor controls when the air compressor will pump air into the air storage tanks. When air tank pressure rises to the "cut-out" level (around 125 pounds per-square-inch or "psi"), the governor stops the compressor from pumping air. When the tank pressure falls to the "cut-in" pressure (around 100 psi), the governor allows the compressor to start pumping again.

5.1.3 – Air Storage Tanks

Air storage tanks are used to hold compressed air. The number and size of air tanks varies among vehicles. The tanks will hold enough air to allow the brakes to be used several times, even if the compressor stops working.

5.1.4 – Air Tank Drains

Compressed air usually has some water and some compressor oil in it, which is bad for the air brake system. For example, the water can freeze in cold weather and cause brake failure. The water and oil tend to collect in the bottom of the air tank. Be sure that you drain the air tanks completely. Each air tank is equipped with a drain valve in the bottom. There are two types:

- Manually operated by turning a quarter turn or by pulling a cable. You must drain the tanks yourself at the end of each day of driving. See Figure 5.1.
- Automatic--the water and oil are automatically expelled. These tanks may be equipped for manual draining as well.

Automatic air tanks are available with electric heating devices. These help prevent freezing of the automatic drain in cold weather.

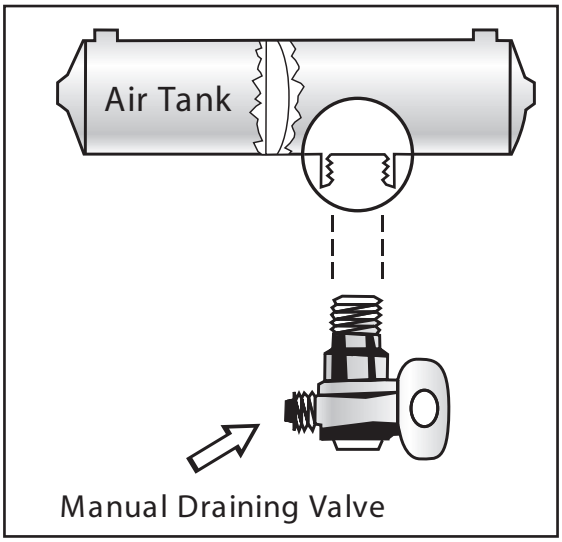

Figure 5.1

5.1.5 – Alcohol Evaporator

Some air brake systems have an alcohol evaporator to put alcohol into the air system. This helps to reduce the risk of ice in air brake valves and other parts during cold weather. Ice inside the system can make the brakes stop working.

Check the alcohol container and fill up as necessary, every day during cold weather. Daily air tank drainage is still needed to get rid of water and oil. (Unless the system has automatic drain valves.)

5.1.6 – Safety Valve

A safety relief valve is installed in the first tank the air compressor pumps air to. The safety valve protects the tank and the rest of the system from too much pressure. The valve is usually set to open at 150 psi. If the safety valve releases air, something is wrong. Have the fault fixed by a mechanic.

5.1.7 – The Brake Pedal

You put on the brakes by pushing down the brake pedal. (It is also called the foot valve or treadle valve.) Pushing the pedal down harder applies more air pressure. Letting up on the brake pedal reduces the air pressure and releases the brakes. Releasing the brakes lets some compressed air go out of the system, so the air pressure in the tanks is reduced. It must be made up by the air compressor. Pressing and releasing the pedal unnecessarily can let air out faster than the compressor can replace it. If the pressure gets too low, the brakes won't work.

5.1.8 – Foundation Brakes

Foundation brakes are used at each wheel. The most common type is the s-cam drum brake. The parts of the brake are discussed below.

Brake Drums, Shoes, and Linings. Brake drums are located on each end of the vehicle's axles. The wheels are bolted to the drums. The braking mechanism is inside the drum. To stop, the brake shoes and linings are pushed against the inside of the drum. This causes friction, which slows the vehicle (and creates heat). The heat a drum can take without damage depends on how hard and how long the brakes are used. Too much heat can make the brakes stop working.

S-cam Brakes. When you push the brake pedal, air is let into each brake chamber. Air pressure pushes the rod out, moving the slack adjuster, thus twisting the brake camshaft. This turns the s-cam (so called because it is shaped like the letter "S"). The s-cam forces the brake shoes away from one another and presses them against the inside of the brake drum.

When you release the brake pedal, the s-cam rotates back and a spring pulls the brake shoes away from the drum, letting the wheels roll freely again. See Figure 5.2.

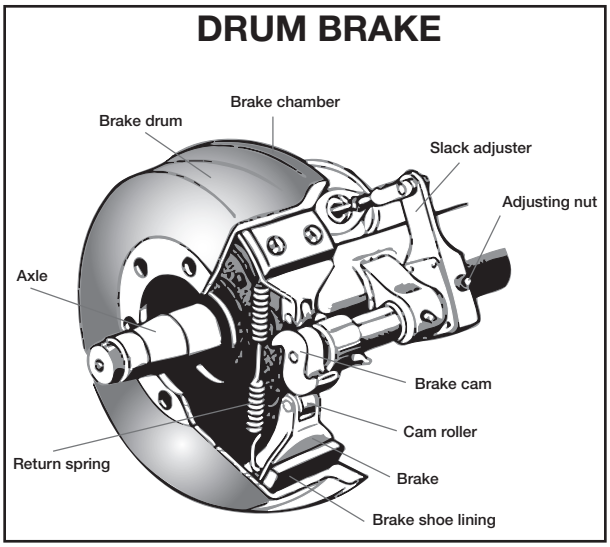

Figure 5.2

Wedge Brakes. In this type of brake, the brake chamber push rod pushes a wedge directly between the ends of two brake shoes. This shoves them apart and against the inside of the brake drum. Wedge brakes may have a single brake chamber, or two brake chambers, pushing wedges in at both ends of the brake shoes. Wedge type brakes may be self-adjusting or may require manual adjustment.

Disc Brakes. In air-operated disc brakes, air pressure acts on a brake chamber and slack adjuster, like s-cam brakes. But instead of the s-cam, a "power screw" is used. The pressure of the brake chamber on the slack adjuster turns the power screw. The power screw clamps the disc or rotor between the brake lining pads of a caliper, similar to a large c-clamp.

Wedge brakes and disc brakes are less common than s-cam brakes.

5.1.9 – Supply Pressure Gauges

All vehicles with air brakes have a pressure gauge connected to the air tank. If the vehicle has a dual air brake system, there will be a gauge for each half of the system. (Or a single gauge with two needles.) Dual systems will be discussed later. These gauges tell you how much pressure is in the air tanks.

5.1.10 – Application Pressure Gauge

This gauge shows how much air pressure you are applying to the brakes. (This gauge is not on all vehicles.) Increasing application pressure to hold the same speed means the brakes are fading. You should slow down and use a lower gear. The need for increased pressure can also be caused by brakes out of adjustment, air leaks, or mechanical problems.

5.1.11 – Low Air Pressure Warning

A low air pressure warning signal is required on vehicles with air brakes. A warning signal you can see must come on before the air pressure in the tanks falls below 60 psi. (Or one half the compressor governor cutout pressure on older vehicles.) The warning is usually a red light. A buzzer may also come on.

Another type of warning is the "wig wag." This device drops a mechanical arm into your view when the pressure in the system drops below 60 psi. An automatic wig wag will rise out of your view when the pressure in the system goes above 60 psi. The manual reset type must be placed in the "out of view" position manually. It will not stay in place until the pressure in the system is above 60 psi.

On large buses it is common for the low pressure warning devices to signal at 80-85 psi.

5.1.12 – Stop Light Switch

Drivers behind you must be warned when you put your brakes on. The air brake system does this with an electric switch that works by air pressure. The switch turns on the brake lights when you put on the air brakes.

5.1.13 – Front Brake Limiting Valve

Some older vehicles (made before 1975) have a front brake limiting valve and a control in the cab. The control is usually marked "normal" and "slippery." When you put the control in the "slippery" position, the limiting valve cuts the "normal" air pressure to the front brakes by half. Limiting valves were used to reduce the chance of the front wheels skidding on slippery surfaces. However, they actually reduce the stopping power of the vehicle. Front wheel braking is good under all conditions. Tests have shown front wheel skids from braking are not likely even on ice. Make sure the control is in the "normal" position to have normal stopping power.

Many vehicles have automatic front wheel limiting valves. They reduce the air to the front brakes except when the brakes are put on very hard (60 psi or more application pressure). These valves cannot be controlled by the driver.

5.1.14 – Spring Brakes

All trucks, truck tractors, and buses must be equipped with emergency brakes and parking brakes. They must be held on by mechanical force (because air pressure can eventually leak away). Spring brakes are usually used to meet these needs. When driving, powerful springs are held back by air pressure. If the air pressure is removed, the springs put on the brakes. A parking brake control in the cab allows the driver to let the air out of the spring brakes. This lets the springs put the brakes on. A leak in the air brake system, which causes all the air to be lost, will also cause the springs to put on the brakes.

Tractor and straight truck spring brakes will come fully on when air pressure drops to a range of 20 to 45 psi (typically 20 to 30 psi). Do not wait for the brakes to come on automatically. When the low air pressure warning light and buzzer first come on, bring the vehicle to a safe stop right away, while you can still control the brakes.

The braking power of spring brakes depends on the brakes being in adjustment. If the brakes are not adjusted properly, neither the regular brakes nor the emergency/parking brakes will work right.

5.1.15 – Parking Brake Controls

In newer vehicles with air brakes, you put on the parking brakes using a diamond-shaped, yellow, push-pull control knob. You pull the knob out to put the parking brakes (spring brakes) on, and push it in to release them. On older vehicles, the parking brakes may be controlled by a lever. Use the parking brakes whenever you park.

Caution. Never push the brake pedal down when the spring brakes are on. If you do, the brakes could be damaged by the combined forces of the springs and the air pressure. Many brake systems are designed so this will not happen. But not all systems are set up that way, and those that are may not always work. It is much better to develop the habit of not pushing the brake pedal down when the spring brakes are on.

Modulating Control Valves. In some vehicles a control handle on the dash board may be used to apply the spring brakes gradually. This is called a modulating valve. It is spring-loaded so you have a feel for the braking action. The more you move the control lever, the harder the spring brakes come on. They work this way so you can control the spring brakes if the service brakes fail. When parking a vehicle with a modulating control valve, move the lever as far as it will go and hold it in place with the locking device.

Dual Parking Control Valves. When main air pressure is lost, the spring brakes come on. Some vehicles, such as buses, have a separate air tank which can be used to release the spring brakes. This is so you can move the vehicle in an emergency. One of the valves is a push-pull type and is used to put on the spring brakes for parking. The other valve is spring loaded in the "out" position. When you push the control in, air from the separate air tank releases the spring brakes so you can move. When you release the button, the spring brakes come on again. There is only enough air in the separate tank to do this a few times. Therefore, plan carefully when moving. Otherwise, you may be stopped in a dangerous location when the separate air supply runs out. See Figure 5.3.

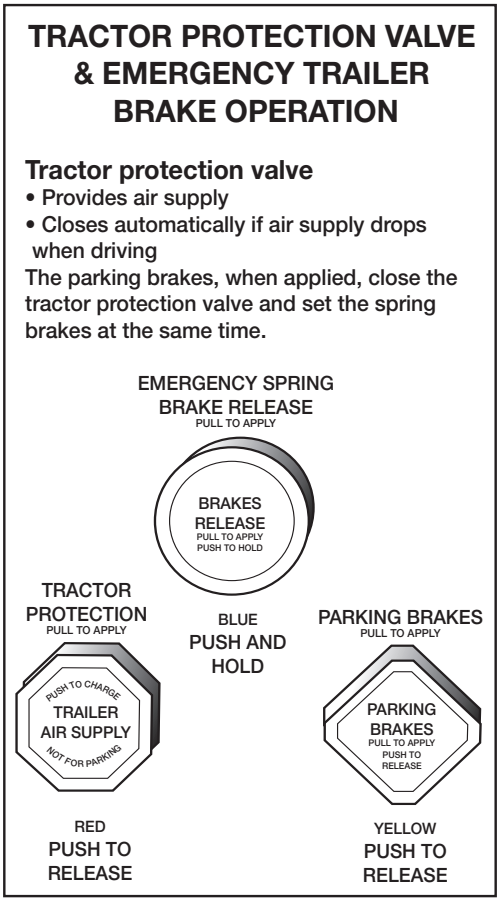

Figure 5.3

5.1.16 – Antilock Braking Systems (ABS)

Truck tractors with air brakes built on or after March 1, 1997, and other air brakes vehicles, (trucks, buses, trailers, and converter dollies) built on or after March 1, 1998, are required to be equipped with antilock brakes. Many commercial vehicles built before these dates have been voluntarily equipped with ABS. Check the certification label for the date of manufacture to determine if your vehicle is equipped with ABS. ABS is a computerized system that keeps your wheels from locking up during hard brake applications.

Vehicles with ABS have yellow malfunction lamps to tell you if something isn't working.

Tractors, trucks, and buses will have yellow ABS malfunction lamps on the instrument panel.

Trailers will have yellow ABS malfunction lamps on the left side, either on the front or rear corner. Dollies manufactured on or after March 1, 1998 are required to have a lamp on the left side.

On newer vehicles, the malfunction lamp comes on at start-up for a bulb check, and then goes out quickly. On older systems, the lamp could stay on until you are driving over five mph.

If the lamp stays on after the bulb check, or goes on once you are under way, you may have lost ABS control at one or more wheels.

In the case of towed units manufactured before it was required by the Department of Transportation, it may be difficult to tell if the unit is equipped with ABS. Look under the vehicle for the electronic control unit (ECU) and wheel speed sensor wires coming from the back of the brakes.

ABS is an addition to your normal brakes. It does not decrease or increase your normal braking capability. ABS only activates when wheels are about to lock up.

ABS does not necessarily shorten your stopping distance, but it does help you keep the vehicle under control during hard braking.

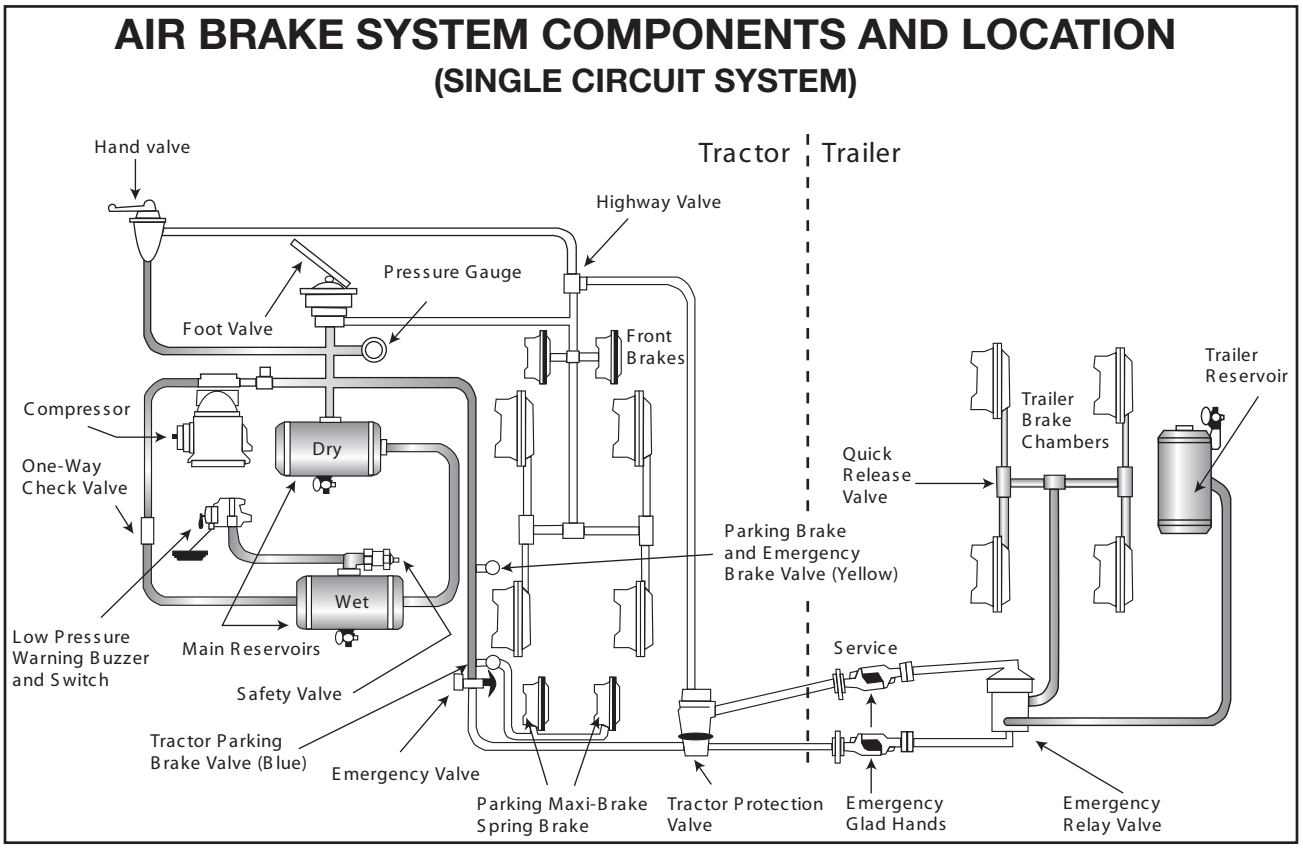

Figure 5.4

Subsection 5.1
Test Your Knowledge

1. Why must air tanks be drained?
2. What is a supply pressure gauge used for?
3. All vehicles with air brakes must have a low air pressure warning signal. True or False?
4. What are spring brakes?
5. Front wheel brakes are good under all conditions. True or False?
6. How do you know if your vehicle is equipped with antilock brakes?

These questions may be on your test. If you can't answer them all, re-read subsection 5.1.

5.2 – Dual Air Brake

Most heavy-duty vehicles use dual air brake systems for safety. A dual air brake system has two separate air brake systems, which use a single set of brake controls. Each system has its own air tanks, hoses, lines, etc. One system typically operates the regular brakes on the rear axle or axles. The other system operates the regular brakes on the front axle (and possibly one rear axle). Both systems supply air to the trailer (if there is one). The first system is called the "primary" system. The other is called the "secondary" system. See Figure 5.4.

Before driving a vehicle with a dual air system, allow time for the air compressor to build up a minimum of 100 psi pressure in both the primary and secondary systems. Watch the primary and secondary air pressure gauges (or needles, if the system has two needles in one gauge). Pay attention to the low air pressure warning light and buzzer. The warning light and buzzer should shut off when air pressure in both systems rises to a value set by the manufacturer. This value must be greater than 60 psi.

The warning light and buzzer should come on before the air pressure drops below 60 psi in either system. If this happens while driving, you should stop right away and safely park the vehicle. If one air system is very low on pressure, either the front or the rear brakes will not be operating fully. This means it will take you longer to stop. Bring the vehicle to a safe stop, and have the air brakes system fixed.

5.3 – Inspecting Air Brake Systems

You should use the basic seven-step inspection procedure described in Section 2 to inspect your vehicle. There are more things to inspect on a vehicle with air brakes than one without them. These things are discussed below, in the order they fit into the seven-step method.

5.3.1 – During Step 2 Engine Compartment Checks

Check Air Compressor Drive Belt (if compressor is belt-driven). If the air compressor is belt-driven, check the condition and tightness of the belt. It should be in good condition.

5.3.2 – During Step 5 Walk-around Inspection

Check Slack Adjusters on S-cam Brakes. Park on level ground and chock the wheels to prevent the vehicle from moving. Release the parking brakes so you can move the slack adjusters. Use gloves and pull hard on each slack adjuster that you can reach. If a slack adjuster moves more than about one inch where the push rod attaches to it, it probably needs adjustment. Adjust it or have it adjusted. Vehicles with too much brake slack can be very hard to stop. Out-of-adjustment brakes are the most common problem found in roadside inspections. Be safe. Check the slack adjusters.

All vehicles built since 1994 have automatic slack adjustors. Even though automatic slack adjustors adjust themselves during full brake applications, they must be checked.

Automatic adjusters should not have to be manually adjusted except when performing maintenance on the brakes and during installation of the slack adjusters. In a vehicle equipped with automatic adjusters, when the pushrod stroke exceeds the legal brake adjustment limit, it is an indication that a mechanical problem exists in the adjuster itself, a problem with the related foundation brake components, or that the adjuster was improperly installed.

The manual adjustment of an automatic adjuster to bring a brake pushrod stroke within legal limits is generally masking a mechanical problem and is not fixing it. Further, routine adjustment of most automatic adjusters will likely result in premature wear of the adjuster itself. It is recommended that when brakes equipped with automatic adjusters are found to be out of adjustment, the driver take the vehicle to a repair facility as soon as possible to have the problem corrected. The manual adjustment of automatic slack adjusters is dangerous because it may give the driver a false sense of security regarding the effectiveness of the braking system.

The manual adjustment of an automatic adjuster should only be used as a temporary measure to correct the adjustment in an emergency situation as it is likely the brake will soon be back out of adjustment since this procedure usually does not fix the underlying adjustment problem.

(Note: Automatic slack adjusters are made by different manufacturers and do not all operate the same. Therefore, the specific manufacturer's Service Manual should be consulted prior to troubleshooting a brake adjustment problem.)

Check Brake Drums (or Discs), Linings, and Hoses. Brake drums (or discs) must not have cracks longer than one half the width of the friction area. Linings (friction material) must not be loose or soaked with oil or grease. They must not be dangerously thin. Mechanical parts must be in place, not broken or missing. Check the air hoses connected to the brake chambers to make sure they aren't cut or worn due to rubbing.

5.3.3 – Step 7 Final Air Brake Check

Do the following checks instead of the hydraulic brake check shown in Section 2, Step 7: Check Brake System.

Check Air Compressor Governor Cut-in and Cut-out Pressures. Pumping by the air compressor should start at about 100 psi and stop at about 125 psi. (Check manufacturer's specifications.) Run the engine at a fast idle. The air governor should cut-out the air compressor at about the manufacturer's specified pressure. The air pressure shown by your gauge(s) will stop rising. With the engine idling, step on and off the brake to reduce the air tank pressure. The compressor should cut-in at about the manufacturer's specified cut-in pressure. The pressure should begin to rise.

If the air governor does not work as described above, it may need to be fixed. A governor that does not work properly may not keep enough air pressure for safe driving.

Test Air Leakage Rate. With a fully-charged air system (typically 125 psi), turn off the engine, release the parking brake (push in); and time the air pressure drop. The loss rate should be less than two psi in one minute for single vehicles and less than three psi in one minute for combination vehicles.

With the air pressure built up to governor cutoff (120 – 140 psi), shut off the engine, chock your wheels (if necessary), release the parking brake (all vehicles), and the tractor protection valve (combination vehicle); and fully apply the foot brake. Hold the foot brake for one minute. Check the air gauge to see if the air pressure drops more than three pounds in one minute (single vehicle) or four pounds in one minute (combination vehicle). If the air pressure falls more than three psi in one minute for single vehicles (more than four psi for combination vehicles), the air loss rate is too much. Check for air leaks and fix before driving the vehicle. Otherwise, you could lose your brakes while driving.

Test Low Pressure Warning Signal. Shut the engine off when you have enough air pressure so that the low pressure warning signal is not on. Turn the electrical power on and step on and off the brake pedal to reduce air tank pressure. The low air pressure warning signal must come on before the pressure drops to less than 60 psi in the air tank (or tank with the lowest air pressure, in dual air systems). See Figure 5.5.

If the warning signal doesn't work, you could lose air pressure and you would not know it. This could cause sudden emergency braking in a single-circuit air system. In dual systems the stopping distance will be increased. Only limited braking can be done before the spring brakes come on.

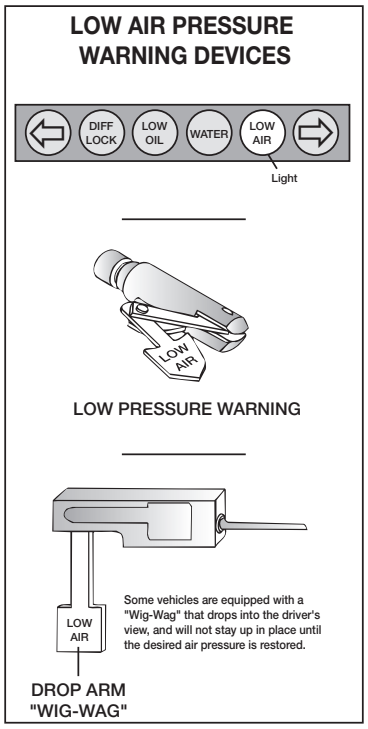

Figure 5.5

Check That Spring Brakes Come On Automatically. Continue to fan off the air pressure by stepping on and off the brake pedal to reduce tank pressure. The tractor protection valve and parking brake valve should close (pop out) on a tractor-trailer combination vehicle and the parking brake valve should close (pop out) on other combination and single vehicle types when the air pressure falls to the manufacturer's specification (20 – 45 psi). This will cause the spring brakes to come on.

Check Rate of Air Pressure Buildup. When the engine is at operating rpms, the pressure should build from 85 to 100 psi within 45 seconds in dual air systems. (If the vehicle has larger than minimum air tanks, the buildup time can be longer and still be safe. Check the manufacturer's specifications.) In single air systems (pre-1975), typical requirements are pressure build-up from 50 to 90 psi within 3 minutes with the engine at an idle speed of 600-900 rpms.

If air pressure does not build up fast enough, your pressure may drop too low during driving, requiring an emergency stop. Don't drive until you get the problem fixed.

Test Parking Brake. Stop the vehicle, put the parking brake on, and gently pull against it in a low gear to test that the parking brake will hold.

Test Service Brakes. Wait for normal air pressure, release the parking brake, move the vehicle forward slowly (about five mph), and apply the brakes firmly using the brake pedal. Note any vehicle "pulling" to one side, unusual feel, or delayed stopping action.

This test may show you problems, which you otherwise wouldn't know about until you needed the brakes on the road.

Subsections 5.2 and 5.3
Test Your Knowledge

1. What is a dual air brake system?
2. What are the slack adjusters?
3. How can you check slack adjusters?
4. How can you test the low pressure warning signal?
5. How can you check that the spring brakes come on automatically?
6. What are the maximum leakage rates?

These questions may be on your test. If you can't answer them all, re-read subsections 5.2 and 5.3.

5.4 – Using Air Brakes

5.4.1 – Normal Stops

Push the brake pedal down. Control the pressure so the vehicle comes to a smooth, safe stop. If you have a manual transmission, don't push the clutch in until the engine rpm is down close to idle. When stopped, select a starting gear.

5.4.2 – Braking with Antilock Brakes

When you brake hard on slippery surfaces in a vehicle without ABS, your wheels may lock up. When your steering wheels lock up, you lose steering control. When your other wheels lock up, you may skid, jackknife, or even spin the vehicle.

ABS helps you avoid wheel lock up. The computer senses impending lockup, reduces the braking pressure to a safe level, and you maintain control.

You may or may not be able to stop faster with ABS, but you should be able to steer around an obstacle while braking, and avoid skids caused by over braking.

Having ABS on only the tractor, only the trailer, or even on only one axle, still gives you more control over the vehicle during braking. Brake normally.

When only the tractor has ABS, you should be able to maintain steering control, and there is less chance of jackknifing. But, keep your eye on the trailer and let up on the brakes (if you can safely do so) if it begins to swing out.

When only the trailer has ABS, the trailer is less likely to swing out, but if you lose steering control or start a tractor jackknife, let up on the brakes (if you can safely do so) until you gain control.

When you drive a tractor-trailer combination with ABS, you should brake as you always have. In other words:

Use only the braking force necessary to stop safely and stay in control.

Brake the same way, regardless of whether you have ABS on the tractor, the trailer, or both.

As you slow down, monitor your tractor and trailer and back off the brakes (if it is safe to do so) to stay in control.

There is only one exception to this procedure, if you always drive a straight truck or combination with working ABS on all axles, in an emergency stop, you can fully apply the brakes.

Without ABS, you still have normal brake functions. Drive and brake as you always have.

Remember, if your ABS malfunctions, you still have regular brakes. Drive normally, but get the system serviced soon.

5.4.3 – Emergency Stops

If somebody suddenly pulls out in front of you, your natural response is to hit the brakes. This is a good response if there's enough distance to stop, and you use the brakes correctly.

You should brake in a way that will keep your vehicle in a straight line and allow you to turn if it becomes necessary. You can use the "controlled braking" method or the "stab braking" method.

Controlled Braking. With this method, you apply the brakes as hard as you can without locking the wheels. Keep steering wheel movements very small while doing this. If you need to make a larger steering adjustment or if the wheels lock, release the brakes. Re-apply the brakes as soon as you can.

Stab Braking. Apply your brakes all the way. Release brakes when wheels lock up. As soon as the wheels start rolling, apply the brakes fully again. (It can take up to one second for the wheels to start rolling after you release the brakes. If you re-apply the brakes before the wheels start rolling, the vehicle won't straighten out.)

5.4.4 – Stopping Distance

Stopping distance was described in Section 2 under "Speed and Stopping Distance." With air brakes there is an added delay - "Brake Lag". This is the time required for the brakes to work after the brake pedal is pushed. With hydraulic brakes (used on cars and light/medium trucks), the brakes work instantly. However, with air brakes, it takes a little time (one half second or more) for the air to flow through the lines to the brakes. Thus, the total stopping distance for vehicles with air brake systems is made up of four different factors.

Perception Distance + Reaction Distance + Brake Lag Distance + Braking Distance = Total Stopping Distance.

The air brake lag distance at 55 mph on dry pavement adds about 32 feet. So at 55 mph for an average driver under good traction and brake conditions, the total stopping distance is over 450 feet. See Figure 5.6.

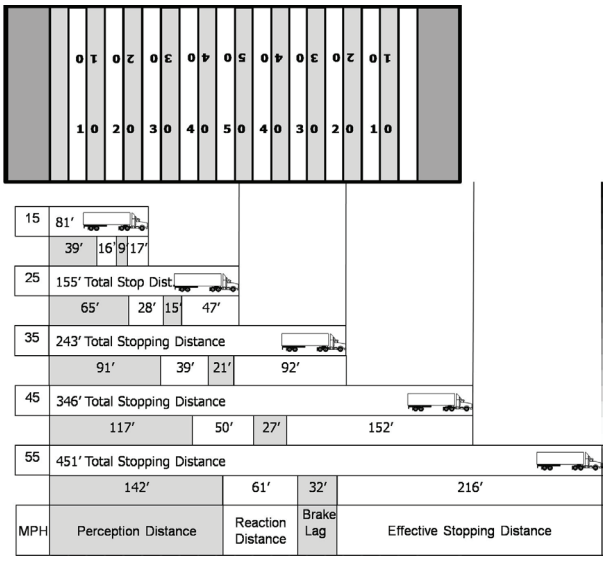

Figure 5.6

5.4.5 – Brake Fading or Failure

Brakes are designed so brake shoes or pads rub against the brake drum or disks to slow the vehicle. Braking creates heat, but brakes are designed to take a lot of heat. However, brakes can fade or fail from excessive heat caused by using them too much and not relying on the engine braking effect.

Excessive use of the service brakes results in overheating and leads to brake fade. Brake fade results from excessive heat causing chemical changes in the brake lining, which reduce friction, and also causing expansion of the brake drums. As the overheated drums expand, the brake shoes and linings have to move farther to contact the drums, and the force of this contact is reduced. Continued overuse may increase brake fade until the vehicle cannot be slowed down or stopped.

Brake fade is also affected by adjustment. To safely control a vehicle, every brake must do its share of the work. Brakes out of adjustment will stop doing their share before those that are in adjustment. The other brakes can then overheat and fade, and there will not be enough braking available to control the vehicle(s). Brakes can get out of adjustment quickly, especially when they are hot. Therefore, check brake adjustment often.

5.4.6 – Proper Braking Technique

Remember. The use of brakes on a long and/or steep downgrade is only a supplement to the braking effect of the engine. Once the vehicle is in the proper low gear, the following is the proper braking technique:

Apply the brakes just hard enough to feel a definite slowdown.

When your speed has been reduced to approximately five mph below your "safe" speed, release the brakes. (This application should last for about three seconds.)

When your speed has increased to your "safe" speed, repeat steps 1 and 2.

For example, if your "safe" speed is 40 mph, you would not apply the brakes until your speed reaches 40 mph. You now apply the brakes hard enough to gradually reduce your speed to 35 mph and then release the brakes. Repeat this as often as necessary until you have reached the end of the downgrade.

5.4.7 – Low Air Pressure

If the low air pressure warning comes on, stop and safely park your vehicle as soon as possible. There might be an air leak in the system. Controlled braking is possible only while enough air remains in the air tanks. The spring brakes will come on when the air pressure drops into the range of 20 to 45 psi. A heavily loaded vehicle will take a long distance to stop because the spring brakes do not work on all axles. Lightly loaded vehicles or vehicles on slippery roads may skid out of control when the spring brakes come on. It is much safer to stop while there is enough air in the tanks to use the foot brakes.

5.4.8 – Parking Brakes

Any time you park, use the parking brakes, except as noted below. Pull the parking brake control knob out to apply the parking brakes, push it in to release. The control will be a yellow, diamond-shaped knob labeled "parking brakes" on newer vehicles. On older vehicles, it may be a round blue knob or some other shape (including a lever that swings from side to side or up and down).

Don't use the parking brakes if the brakes are very hot (from just having come down a steep grade), or if the brakes are very wet in freezing temperatures. If they are used while they are very hot, they can be damaged by the heat. If they are used in freezing temperatures when the brakes are very wet, they can freeze so the vehicle cannot move. Use wheel chocks on a level surface to hold the vehicle. Let hot brakes cool before using the parking brakes. If the brakes are wet, use the brakes lightly while driving in a low gear to heat and dry them.

If your vehicle does not have automatic air tank drains, drain your air tanks at the end of each working day to remove moisture and oil. Otherwise, the brakes could fail.

Never leave your vehicle unattended without applying the parking brakes or chocking the wheels. Your vehicle might roll away and cause injury and damage.

Subsection 5.4
Test Your Knowledge

1. Why should you be in the proper gear before starting down a hill?
2. What factors can cause brakes to fade or fail?
3. The use of brakes on a long, steep downgrade is only a supplement to the braking effect of the engine. True or False?
4. If you are away from your vehicle only a short time, you do not need to use the parking brake. True or False?
5. How often should you drain air tanks?
6. How should you brake when you drive a tractor-trailer combination with ABS?
7. You still have normal brake functions if your ABS is not working. True or False?

These questions may be on your test. If you can't answer them all, re-read subsection 5.4.

Section 6
COMBINATION VEHICLES

This Section Covers

- **Driving Combinations**
- **Combination Vehicle Air Brakes**
- **Antilock Brake Systems**
- **Coupling and Uncoupling**
- **Inspecting Combinations**

This section provides information needed to pass the tests for combination vehicles (tractor-trailer, doubles, triples, straight truck with trailer). The information is only to give you the minimum knowledge needed for driving common combination vehicles. You should also study Section 7 if you need to pass the test for doubles and triples.

6.1 – Driving Combination Vehicles Safely

Combination vehicles are usually heavier, longer, and require more driving skill than single commercial vehicles. This means that drivers of combination vehicles need more knowledge and skill than drivers of single vehicles. In this section, we talk about some important safety factors that apply specifically to combination vehicles.

6.1.1 – Rollover Risks

More than half of truck driver deaths in crashes are the result of truck rollovers. When more cargo is piled up in a truck, the "center of gravity" moves higher up from the road. The truck becomes easier to turn over. Fully loaded rigs are ten times more likely to roll over in a crash than empty rigs.

The following two things will help you prevent rollover--keep the cargo as close to the ground as possible, and drive slowly around turns. Keeping cargo low is even more important in combination vehicles than in straight trucks. Also, keep the load centered on your rig. If the load is to one side so it makes a trailer lean, a rollover is more likely. Make sure your cargo is centered and spread out as much as possible. (Cargo distribution is covered in Section 3 of this manual.)

Rollovers happen when you turn too fast. Drive slowly around corners, on ramps, and off ramps.

Avoid quick lane changes, especially when fully loaded.

6.1.2 – Steer Gently

Trucks with trailers have a dangerous "crack-the-whip" effect. When you make a quick lane change, the crack-the-whip effect can turn the trailer over. There are many accidents where only the trailer has overturned.

"Rearward amplification" causes the crack-the-whip effect. Figure 6.1 shows eight types of combination vehicles and the rearward amplification each has in a quick lane change. Rigs with the least crack-the-whip effect are shown at the top and those with the most, at the bottom. Rearward amplification of 2.0 in the chart means that the rear trailer is twice as likely to turn over as the tractor. You can see that triples have a rearward amplification of 3.5. This means you can roll the last trailer of triples 3.5 times as easily as a five-axle tractor.

Steer gently and smoothly when you are pulling trailers. If you make a sudden movement with your steering wheel, your trailer could tip over. Follow far enough behind other vehicles (at least 1 second for each 10 feet of your vehicle length, plus another second if going over 40 mph). Look far enough down the road to avoid being surprised and having to make a sudden lane change. At night, drive slowly enough to see obstacles with your headlights before it is too late to change lanes or stop gently. Slow down to a safe speed before going into a turn.

6.1.3 – Brake Early

Control your speed whether fully loaded or empty. Large combination vehicles take longer to stop when they are empty than when they are fully loaded. When lightly loaded, the very stiff suspension springs and strong brakes give poor traction and make it very easy to lock up the wheels. Your trailer can swing out and strike other vehicles. Your tractor can jackknife very quickly. You also must be very careful about driving "bobtail" tractors (tractors without semitrailers). Tests have shown that bobtails can be very hard to stop smoothly. It takes them longer to stop than a tractor-semitrailer loaded to maximum gross weight.

In any combination rig, allow lots of following distance and look far ahead, so you can brake early. Don't be caught by surprise and have to make a "panic" stop.

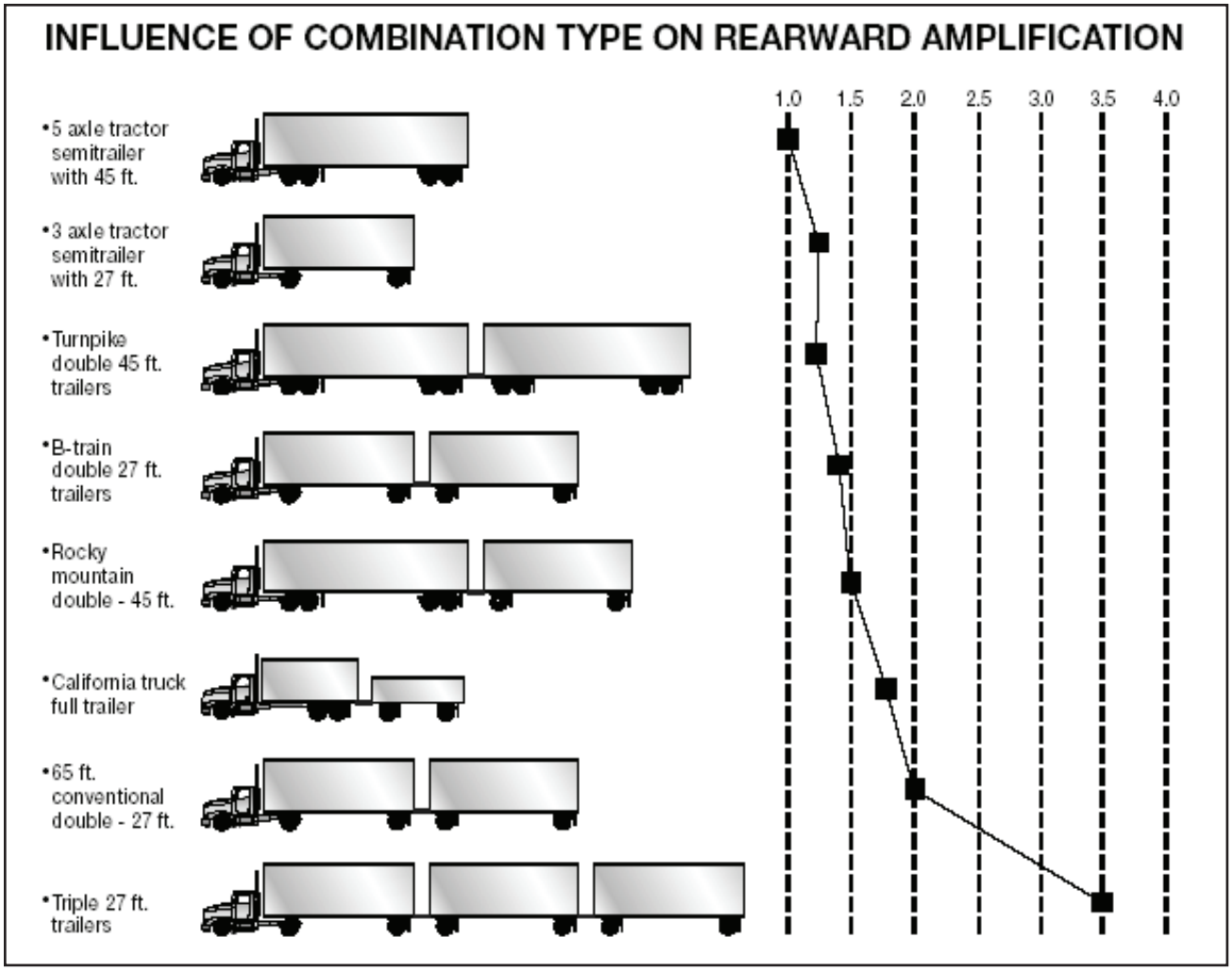

Figure 6.1

6.1.4 – Railroad-highway Crossings

Railroad-highway crossings can also cause problems, particularly when pulling trailers with low underneath clearance.

These trailers can get stuck on raised crossings:

Low slung units (lowboy, car carrier, moving van, possum-belly livestock trailer).

Single-axle tractor pulling a long trailer with its landing gear set to accommodate a tandem-axle tractor.

If for any reason you get stuck on the tracks, get out of the vehicle and away from the tracks. Check signposts or signal housing at the crossing for emergency notification information. Call 911 or other emergency number. Give the location of the crossing using all identifiable landmarks, especially the DOT number, if posted.

6.1.5 – Prevent Trailer Skids

When the wheels of a trailer lock up, the trailer will tend to swing around. This is more likely to happen when the trailer is empty or lightly loaded. This type of jackknife is often called a "trailer jackknife." See Figure 6.2.

The procedure for stopping a trailer skid is:

Recognize the Skid. The earliest and best way to recognize that the trailer has started to skid is by seeing it in your mirrors. Any time you apply the brakes hard, check the mirrors to make sure the trailer is staying where it should be. Once the trailer swings out of your lane, it's very difficult to prevent a jackknife.

* (From R.D. Ervin, R.L. Nisconger, C.C. MacAdam, and P.S. Fancher, "Influence of size and weight variables on the stability and control properties of heavy trucks, "University of Michigan Transportation Research Institute, 1983).

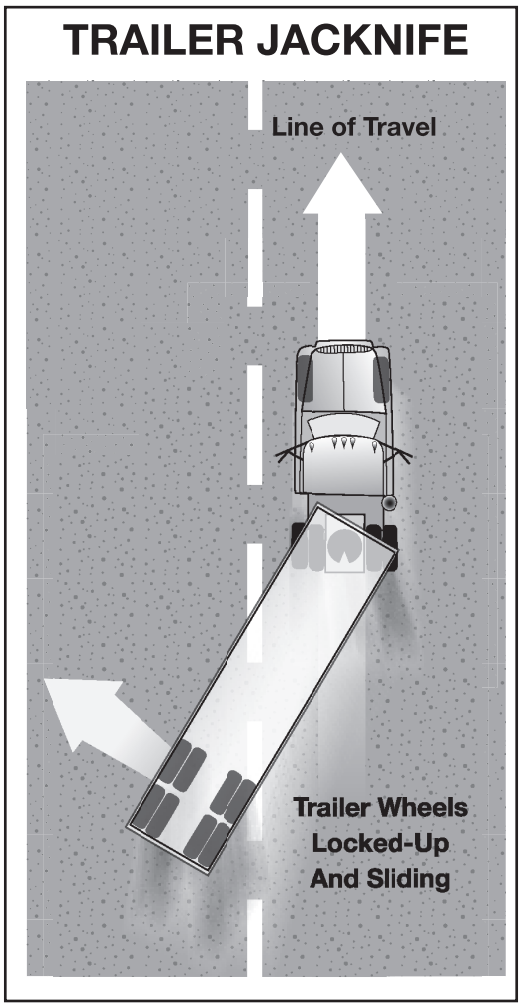

Figure 6.2

Stop Using the Brake. Release the brakes to get traction back. Do not use the trailer hand brake (if you have one) to "straighten out the rig." This is the wrong thing to do since the brakes on the trailer wheels caused the skid in the first place. Once the trailer wheels grip the road again, the trailer will start to follow the tractor and straighten out.

6.1.6 – Turn Wide

When a vehicle goes around a corner, the rear wheels follow a different path than the front wheels. This is called off-tracking or "cheating." Figure 6.3 shows how off-tracking causes the path followed by a tractor to be wider than the rig itself. Longer vehicles will off-track more. The rear wheels of the powered unit (truck or tractor) will off-track some, and the rear wheels of the trailer will off-track even more. If there is more than one trailer, the rear wheels of the last trailer will off-track the most. Steer the front end wide enough around a corner so the rear end does not run over the curb, pedestrians, etc. However, keep the rear of your vehicle close to the curb. This will stop other drivers from passing you on the right. If you cannot complete your turn without entering another traffic lane, turn wide as you complete the turn. This is better than swinging wide to the left before starting the turn because it will keep other drivers from passing you on the right. See Figure 6.4.

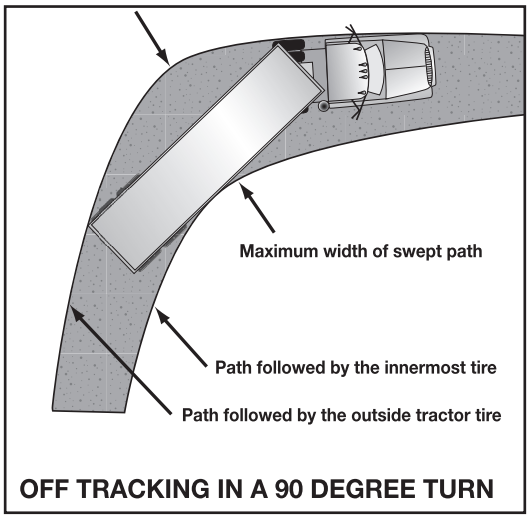

Figure 6.3

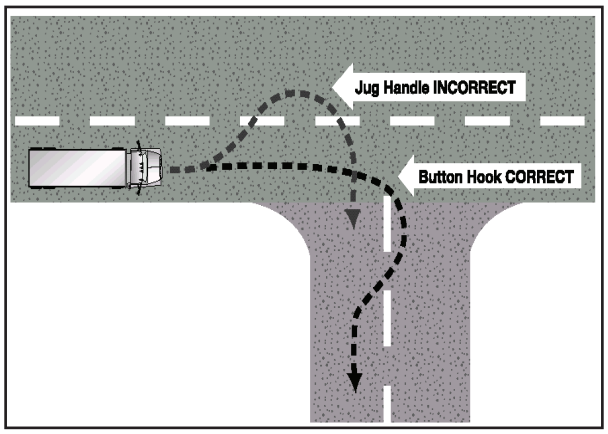

Figure 6.4

6.1.7 – Backing with a Trailer.

Backing with a Trailer. When backing a car, straight truck, or bus, you turn the top of the steering wheel in the direction you want to go. When backing a trailer, you turn the steering wheel in the opposite direction. Once the trailer starts to turn, you must turn the wheel the other way to follow the trailer.

Whenever you back up with a trailer, try to position your vehicle so you can back in a straight line. If you must back on a curved path, back to the driver's side so you can see. See Figure 6.5.

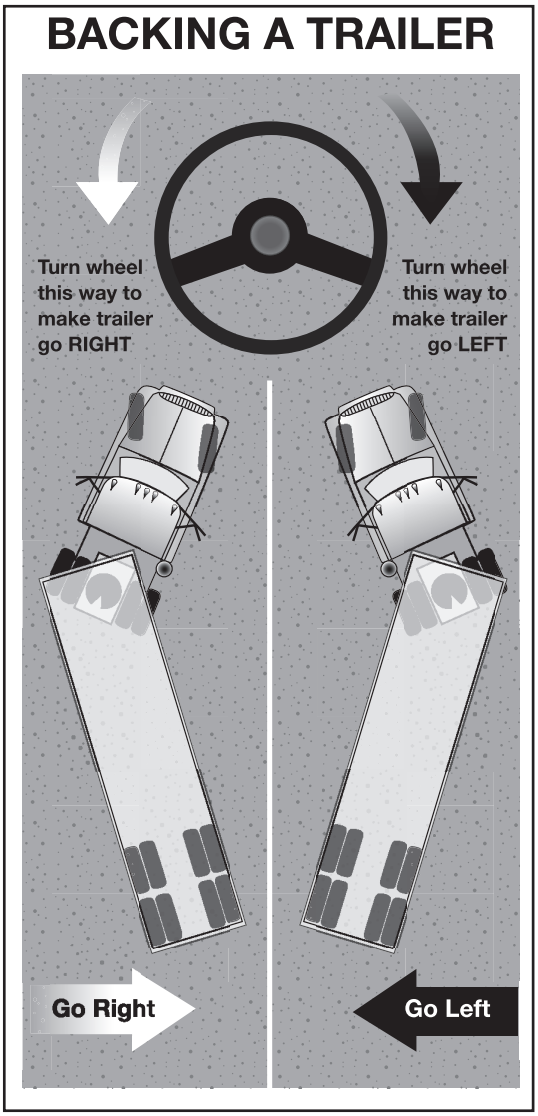

Figure 6.5

Look at Your Path. Look at your line of travel before you begin. Get out and walk around the vehicle. Check your clearance to the sides and overhead, in and near the path your vehicle.

Use Mirrors on Both Sides. Check the outside mirrors on both sides frequently. Get out of the vehicle and re-inspect your path if you are unsure.

Back Slowly. This will let you make corrections before you get too far off course.

Correct Drift Immediately. As soon as you see the trailer getting off the proper path, correct it by turning the top of the steering wheel in the direction of the drift.

Pull Forward. When backing a trailer, make pull-ups to re-position your vehicle as needed.

Subsection 6.1
Test Your Knowledge

1. What two things are important to prevent rollover?
2. When you turn suddenly while pulling doubles, which trailer is most likely to turn over?
3. Why should you not use the trailer hand brake to straighten out a jackknifing trailer?
4. What is off-tracking?
5. When you back a trailer, you should position your vehicle so you can back in a curved path to the driver's side. True or False?
6. What type of trailers can get stuck on railroad-highway crossings?

These questions may be on your test. If you can't answer them all, re-read subsection 6.1.

6.2 – Combination Vehicle Air Brakes

You should study Section 5: Air Brakes before reading this. In combination vehicles the braking system has parts to control the trailer brakes, in addition to the parts described in Section 5. These parts are described below.

6.2.1 – Trailer Hand Valve

The trailer hand valve (also called the trolley valve or Johnson bar) works the trailer brakes. The trailer hand valve should be used only to test the trailer brakes. Do not use it in driving because of the danger of making the trailer skid. The foot brake sends air to all of the brakes on the vehicle (including the trailer(s)). There is much less danger of causing a skid or jackknife when using just the foot brake.

Never use the hand valve for parking because all the air might leak out unlocking the brakes (in trailers that don't have spring brakes). Always use the parking brakes when parking. If the trailer does not have spring brakes, use wheel chocks to keep the trailer from moving.

6.2.2 – Tractor Protection Valve

The tractor protection valve keeps air in the tractor or truck brake system should the trailer break away or develop a bad leak. The tractor protection valve is controlled by the "trailer air supply" control valve in the cab. The control valve allows you to open and shut the tractor protection valve. The tractor protection valve will close automatically if air pressure is low (in the range of 20 to 45 psi). When the tractor protection valve closes, it stops any air

from going out of the tractor. It also lets the air out of the trailer emergency line. This causes the trailer emergency brakes to come on, with possible loss of control. (Emergency brakes are covered later.)

6.2.3 – Trailer Air Supply Control

The trailer air supply control on newer vehicles is a red eight-sided knob, which you use to control the tractor protection valve. You push it in to supply the trailer with air, and pull it out to shut the air off and put on the trailer emergency brakes. The valve will pop out (thus closing the tractor protection valve) when the air pressure drops into the range of 20 to 45 psi. Tractor protection valve controls or "emergency" valves on older vehicles may not operate automatically. There may be a lever rather than a knob. The "normal" position is used for pulling a trailer. The "emergency" position is used to shut the air off and put on the trailer emergency brakes.

6.2.4 – Trailer Air-lines

Every combination vehicle has two air-lines, the service line and the emergency line. They run between each vehicle (tractor to trailer, trailer to dolly, dolly to second trailer, etc.)

Service Air-line. The service line (also called the control line or signal line) carries air, which is controlled by the foot brake or the trailer hand brake. Depending on how hard you press the foot brake or hand valve, the pressure in the service line will similarly change. The service line is connected to relay valves. These valves allow the trailer brakes to be applied more quickly than would otherwise be possible.

Emergency Air-line. The emergency line (also called the supply line) has two purposes. First, it supplies air to the trailer air tanks. Second, the emergency line controls the emergency brakes on combination vehicles. Loss of air pressure in the emergency line causes the trailer emergency brakes to come on. The pressure loss could be caused by a trailer breaking loose, thus tearing apart the emergency air hose. Or it could be caused by a hose, metal tubing, or other part breaking, letting the air out. When the emergency line loses pressure, it also causes the tractor protection valve to close (the air supply knob will pop out).

Emergency lines are often coded with the color red (red hose, red couplers, or other parts) to keep from getting them mixed up with the blue service line.

6.2.5 – Hose Couplers (Glad Hands)

Glad hands are coupling devices used to connect the service and emergency air-lines from the truck or tractor to the trailer. The couplers have a rubber seal, which prevents air from escaping. Clean the couplers and rubber seals before a connection is made. When connecting the glad hands, press the two seals together with the couplers at a 90 degree angle to each other. A turn of the glad hand attached to the hose will join and lock the couplers.

When coupling, make sure to couple the proper glad hands together. To help avoid mistakes, colors are sometimes used. Blue is used for the service lines and red for the emergency (supply) lines. Sometimes, metal tags are attached to the lines with the words "service" and "emergency" stamped on them. See Figure 6.6.

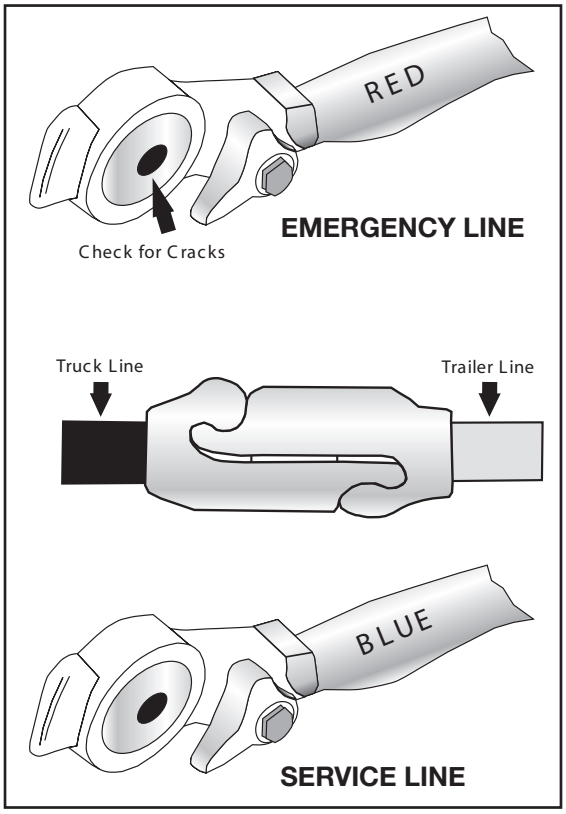

Figure 6.6

If you do cross the air-lines, supply air will be sent to the service line instead of going to charge the trailer air tanks. Air will not be available to release the trailer spring brakes (parking brakes). If the spring brakes don't release when you push the trailer air supply control, check the air-line connections.

Older trailers do not have spring brakes. If the air supply in the trailer air tank has leaked away there will be no emergency brakes, and the trailer wheels will turn freely. If you crossed the air-lines,

you could drive away but you wouldn't have trailer brakes. This would be very dangerous. Always test the trailer brakes before driving with the hand valve or by pulling the air supply (tractor protection valve) control. Pull gently against them in a low gear to make sure the brakes work.

Some vehicles have "dead end" or dummy couplers to which the hoses may be attached when they are not in use. This will prevent water and dirt from getting into the coupler and the air-lines. Use the dummy couplers when the air-lines are not connected to a trailer. If there are no dummy couplers, the glad hands can sometimes be locked together (depending on the couplings). It is very important to keep the air supply clean.

6.2.6 – Trailer Air Tanks

Each trailer and converter dolly has one or more air tanks. They are filled by the emergency (supply) line from the tractor. They provide the air pressure used to operate trailer brakes. Air pressure is sent from the air tanks to the brakes by relay valves.

The pressure in the service line tells how much pressure the relay valves should send to the trailer brakes. The pressure in the service line is controlled by the brake pedal (and the trailer hand brake).

It is important that you don't let water and oil build up in the air tanks. If you do, the brakes may not work correctly. Each tank has a drain valve on it and you should drain each tank every day. If your tanks have automatic drains, they will keep most moisture out. But you should still open the drains to make sure.

6.2.7 – Shut-off Valves

Shut-off valves (also called cut-out cocks) are used in the service and supply air-lines at the back of trailers used to tow other trailers. These valves permit closing the air-lines off when another trailer is not being towed. You must check that all shut-off valves are in the open position except the ones at the back of the last trailer, which must be closed.

6.2.8 – Trailer Service, Parking and Emergency Brakes

Newer trailers have spring brakes just like trucks and truck tractors. However, converter dollies and trailers built before 1975 are not required to have spring brakes. Those that do not have spring brakes have emergency brakes, which work from the air stored in the trailer air tank. The emergency brakes come on whenever air pressure in the emergency line is lost. These trailers have no parking brake. The emergency brakes come on whenever the air supply knob is pulled out or the trailer is disconnected. A major leak in the emergency line will cause the tractor protection valve to close and the trailer emergency brakes to come on. But the brakes will hold only as long as there is air pressure in the trailer air tank. Eventually, the air will leak away and then there will be no brakes. Therefore, it is very important for safety that you use wheel chocks when you park trailers without spring brakes.

You may not notice a major leak in the service line until you try to put the brakes on. Then, the air loss from the leak will lower the air tank pressure quickly. If it goes low enough, the trailer emergency brakes will come on.

Subsection 6.2
Test Your Knowledge

1. Why should you not use the trailer hand valve while driving?
2. Describe what the trailer air supply control does.
3. Describe what the service line is for.
4. What is the emergency air-line for?
5. Why should you use chocks when parking a trailer without spring brakes?
6. Where are shut-off valves?

These questions may be on your test. If you can't answer them all, re-read subsection 6.2.

6.3 – Antilock Brake Systems

6.3.1 – Trailers Required to Have ABS

All trailers and converter dollies built on or after March 1, 1998, are required to have ABS. However, many trailers and converter dollies built before this date have been voluntarily equipped with ABS.

Trailers will have yellow ABS malfunction lamps on the left side, either on the front or rear corner. See Figure 6.7. Dollies manufactured on or after March 1, 1998, are required to have a lamp on the left side.

In the case of vehicles manufactured before the required date, it may be difficult to tell if the unit is equipped with ABS. Look under the vehicle for the ECU and wheel speed sensor wires coming from the back of the brakes.

Figure 6.7

6.3.2 – Braking with ABS

ABS is an addition to your normal brakes. It does not decrease or increase your normal braking capability. ABS only activates when wheels are about to lock up.

ABS does not necessarily shorten your stopping distance, but it does help you keep the vehicle under control during hard braking.

ABS helps you avoid wheel lock up. The computer senses impending lockup, reduces the braking pressure to a safe level, and you maintain control.

Having ABS on only the trailer, or even on only one axle, still gives you more control over the vehicle during braking.

When only the trailer has ABS, the trailer is less likely to swing out, but if you lose steering control or start a tractor jackknife, let up on the brakes (if you can safely do so) until you gain control.

When you drive a tractor-trailer combination with ABS, you should brake as you always have. In other words:

- Use only the braking force necessary to stop safely and stay in control.
- Brake the same way, regardless of whether you have ABS on the tractor, the trailer, or both.
- As you slow down, monitor your tractor and trailer and back off the brakes (if it is safe to do so) to stay in control.

Remember, if your ABS malfunctions, you still have regular brakes. Drive normally, but get the system serviced soon.

ABS won't allow you to drive faster, follow more closely, or drive less carefully.

6.4 – Coupling and Uncoupling

Knowing how to couple and uncouple correctly is basic to safe operation of combination vehicles. Wrong coupling and uncoupling can be very dangerous. General coupling and uncoupling steps are listed below. There are differences between different rigs, so learn the details of coupling and uncoupling the truck(s) you will operate.

6.4.1 – Coupling Tractor-Semitrailers

Step 1. Inspect Fifth Wheel

- Check for damaged/missing parts.
- Check to see that mounting to tractor is secure, no cracks in frame, etc.
- Be sure that the fifth wheel plate is greased as required. Failure to keep the fifth wheel plate lubricated could cause steering problems because of friction between the tractor and trailer.
- Check if fifth wheel is in proper position for coupling:
  - ➢ Wheel tilted down toward rear of tractor.
  - ➢ Jaws open.
  - ➢ Safety unlocking handle in the automatic lock position.
  - ➢ If you have a sliding fifth wheel, make sure it is locked.
  - ➢ Make sure the trailer kingpin is not bent or broken.

Step 2. Inspect Area and Chock Wheels

- Make sure area around the vehicle is clear.
- Be sure trailer wheels are chocked or spring brakes are on.
- Check that cargo (if any) is secured against movement due to tractor being coupled to the trailer.

Step 3. Position Tractor

- Put the tractor directly in front of the trailer. (Never back under the trailer at an angle because you might push the trailer sideways and break the landing gear.)
- Check position, using outside mirrors, by looking down both sides of the trailer.

Step 4. Back Slowly

- Back until fifth wheel just touches the trailer.
- Don't hit the trailer.

Step 5. Secure Tractor

- Put on the parking brake.
- Put transmission in neutral.

Step 6. Check Trailer Height

- The trailer should be low enough that it is raised slightly by the tractor when the tractor is backed under it. Raise or lower the trailer as needed. (If the trailer is too low, the tractor may strike and damage the trailer nose; if the trailer is too high, it may not couple correctly.)
- Check that the kingpin and fifth wheel are aligned.

Step 7. Connect Air-lines to Trailer

- Check glad hand seals and connect tractor emergency air-line to trailer emergency glad hand.
- Check glad hand seals and connect tractor service air-line to trailer service glad hand.
- Make sure air-lines are safely supported where they won't be crushed or caught while tractor is backing under the trailer.

Step 8. Supply Air to Trailer

- From cab, push in "air supply" knob or move tractor protection valve control from the "emergency" to the "normal" position to supply air to the trailer brake system.
- Wait until the air pressure is normal.
- Check brake system for crossed air-lines.
  - ➢ Shut engine off so you can hear the brakes.
  - ➢ Apply and release trailer brakes and listen for sound of trailer brakes being applied and released. You should hear the brakes move when applied and air escape when the brakes are released.
  - ➢ Check air brake system pressure gauge for signs of major air loss.
- When you are sure trailer brakes are working, start engine.
- Make sure air pressure is up to normal.

Step 9. Lock Trailer Brakes

- Pull out the "air supply" knob or move the tractor protection valve control from "normal" to "emergency."

Step 10. Back Under Trailer

- Use lowest reverse gear.
- Back tractor slowly under trailer to avoid hitting the kingpin too hard.
- Stop when the kingpin is locked into the fifth wheel.

Step 11. Check Connection for Security

- Raise trailer landing gear slightly off ground.
- Pull tractor gently forward while the trailer brakes are still locked to check that the trailer is locked onto the tractor.

Step 12. Secure Vehicle

- Put transmission in neutral.
- Put parking brakes on.
- Shut off engine and take key with you so someone else won't move truck while you are under it.

Step 13. Inspect Coupling

- Use a flashlight, if necessary.
- Make sure there is no space between upper and lower fifth wheel. If there is space, something is wrong (kingpin may be on top of the closed fifth wheel jaws, and trailer would come loose very easily).
- Go under trailer and look into the back of the fifth wheel. Make sure the fifth wheel jaws have closed around the shank of the kingpin.
- Check that the locking lever is in the "lock" position.
- Check that the safety latch is in position over locking lever. (On some fifth wheels the catch must be put in place by hand.)
- If the coupling isn't right, don't drive the coupled unit; get it fixed.

Step 14. Connect the Electrical Cord and Check Air-lines

- Plug the electrical cord into the trailer and fasten the safety catch.
- Check both air-lines and electrical line for signs of damage.
- Make sure air and electrical lines will not hit any moving parts of vehicle.

Step 15. Raise Front Trailer Supports (Landing Gear)

- Use low gear range (if so equipped) to begin raising the landing gear. Once free of weight, switch to the high gear range.
- Raise the landing gear all the way up. (Never drive with landing gear only part way up as it may catch on railroad tracks or other things.)

- After raising landing gear, secure the crank handle safely.
- When full weight of trailer is resting on tractor:
  - ➢ Check for enough clearance between rear of tractor frame and landing gear. (When tractor turns sharply, it must not hit landing gear.)
  - ➢ Check that there is enough clearance between the top of the tractor tires and the nose of the trailer.

Step 16. Remove Trailer Wheel Chocks

- Remove and store wheel chocks in a safe place.

6.4.2 – Uncoupling Tractor-Semitrailers

- The following steps will help you to uncouple safely.

Step 1. Position Rig

- Make sure surface of parking area can support weight of trailer.
- Have tractor lined up with the trailer. (Pulling out at an angle can damage landing gear.)

Step 2. Ease Pressure on Locking Jaws

- Shut off trailer air supply to lock trailer brakes.
- Ease pressure on fifth wheel locking jaws by backing up gently. (This will help you release the fifth wheel locking lever.)
- Put parking brakes on while tractor is pushing against the kingpin. (This will hold rig with pressure off the locking jaws.)

Step 3. Chock Trailer Wheels

- Chock the trailer wheels if the trailer doesn't have spring brakes or if you're not sure. (The air could leak out of the trailer air tank, releasing its emergency brakes. Without chocks, the trailer could move.)

Step 4. Lower the Landing Gear

- If trailer is empty, lower the landing gear until it makes firm contact with the ground.
- If trailer is loaded, after the landing gear makes firm contact with the ground, turn crank in low gear a few extra turns. This will lift some weight off the tractor. (Do not lift trailer off the fifth wheel.) This will:
  - ➢ Make it easier to unlatch fifth wheel.
  - ➢ Make it easier to couple next time.

Step 5. Disconnect Air-lines and Electrical Cable

- Disconnect air-lines from trailer. Connect air-line glad hands to dummy couplers at back of cab or couple them together.
- Hang electrical cable with plug down to prevent moisture from entering it.
- Make sure lines are supported so they won't be damaged while driving the tractor.

Step 6. Unlock Fifth Wheel

- Raise the release handle lock.
- Pull the release handle to "open" position.
- Keep legs and feet clear of the rear tractor wheels to avoid serious injury in case the vehicle moves.

Step 7. Pull Tractor Partially Clear of Trailer

- Pull tractor forward until fifth wheel comes out from under the trailer.
- Stop with tractor frame under trailer (prevents trailer from falling to ground if landing gear should collapse or sink).

Step 8. Secure Tractor

- Apply parking brake.
- Place transmission in neutral.

Step 9. Inspect Trailer Supports

- Make sure ground is supporting trailer.
- Make sure landing gear is not damaged.

Step 10. Pull Tractor Clear of Trailer

- Release parking brakes.
- Check the area and drive tractor forward until it clears.

Subsections 6.3 and 6.4
Test Your Knowledge

1. What might happen if the trailer is too high when you try to couple?
2. After coupling, how much space should be between the upper and lower fifth wheel?
3. You should look into the back of the fifth wheel to see if it is locked onto the kingpin. True or False?
4. To drive you need to raise the landing gear only until it just lifts off the pavement. True or False?
5. How do you know if your trailer is equipped with antilock brakes?

These questions may be on your test. If you can't answer them all, re-read subsections 6.3 and 6.4.

6.4.3 – Coupling a Pintle Hook

Step 1. Inspect Pintle Hook

- Before operating, check for worn, damaged, or missing parts, and make sure mount is secure.
- If the pintle hook is not secured to the mounting surface, the pintle hook could separate from the vehicle which, if not avoided, could result in death or serious injury.

Step 2. Unlock Lock Pin and Open Latch

- Unlock and remove the tethered lock pin, if applicable (Figure 16).

Figure 16

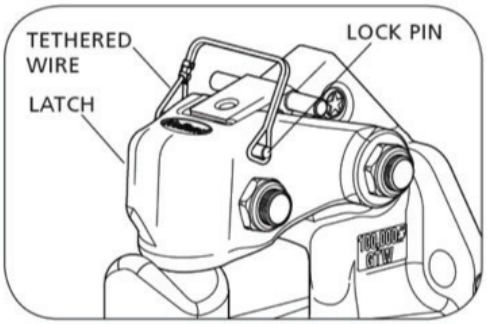

- Lift the lock handle away from the vehicle until the lock clears the lock seat on the hook body.
- Open the latch by rotating the latch assembly up toward the vehicle until the latch is in its most upright position, then release the lock handle. (Figure 17 and 18)

Figure 17

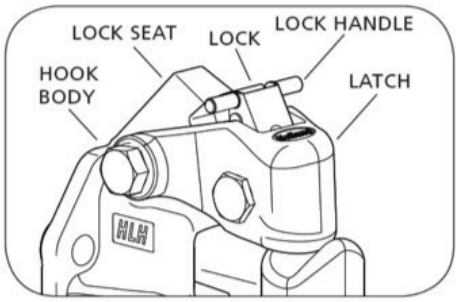

Figure 18

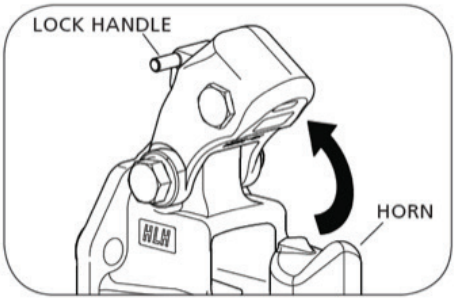

Step 3. Lower Drawbar into Place

- Position the drawbar eye over the horn of the pintle hook and lower it into place.

Step 4. Lock Pintle Hook

- Push the latch closed. When correctly locked, the lock handle will rotate and move up until it is flush with the top of the latch (Figure 19).

Figure 19

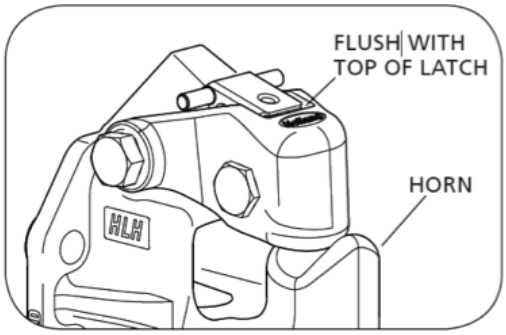

- Insert the tethered lock pin through the latch and lock holes, and close the tethered wire lock pin, if applicable (Figure 16).
- Failure to correctly lock the latch can result in separation of the trailer and vehicle which, if not avoided, could result in death or serious injury.

6.4.4 – Uncoupling a Pintle Hook

Step 1. Park on Level Surface

- Park the trailer on a firm level surface and block trailer tires.

Step 2. Disconnect Electrical Connector, Breakaway Brake Switch and Safety Chains

- Disconnect electrical connector.
- Disconnect breakaway brake switch lanyard.
- Disconnect safety chains from tow vehicle.

Step 3. Unlock the Coupler

- Unlock the coupler and open it.

Step 4. Check Ground Surface for Correct Support

- Before extending jack, make certain the ground surface below the jack pad will support the tongue load.

Step 5. Rotate Jack Handle

- Rotate jack handle to extend the jack and transfer the weight of the trailer tongue to the jack.

Step 6. Raise Trailer Coupler

- Raise the trailer coupler above the tow vehicle hitch.

Step 7. Drive Forward

- Drive tow vehicle forward.

6.4.5 - Coupling a Drawbar

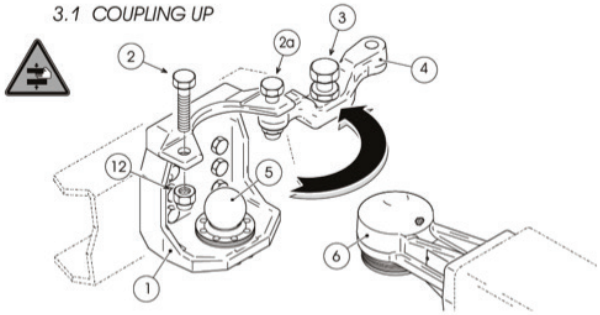

Step 1. Remove Safety Lock screw and Rotate Safety Cover Bar

- Remove safety lock screw (2), recover and keep the relative self-locking nut (12) aside then also loosen safety lock screw (2a) and turn out the adjustment screw (3) by at least five turns.
- Rotate the safety cover bar (4) outwards so that it is completely open.

Step 2. Reverse Truck

- Reverse truck very slowly until the ball cup drawbar eye (6) is in position exactly above the drawbar coupling ball (5).

Step 3. Lower the Drawbeam

- Lower the drawbeam until the ball cup drawbar eye (6) lies completely covering the drawbar coupling ball (5).

Step 4. Rotate the Safety Cover Bar

- Rotate the safety cover bar back inwards (4) and fit in safety lock screw (2) together with its self-locking nut.
- Tighten in both the lock screws (2, 2a) together with their relative self-locking nuts (12, 12a) at a 350 to 400 Nm torque wrench setting.

Step 5. Adjust the Adjustment Screw

- Adjust the adjustment screw (3) until a 0.3 - 0.5 mm vertical clearance between the guard disk (13) and the ball cup (6) is reached. Lock setting with counter nut (11).

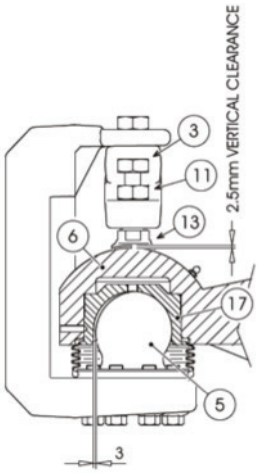

- In the event that the safety cover bar (4) will not perfectly lodge into its seating appropriately, travel is strictly forbidden.

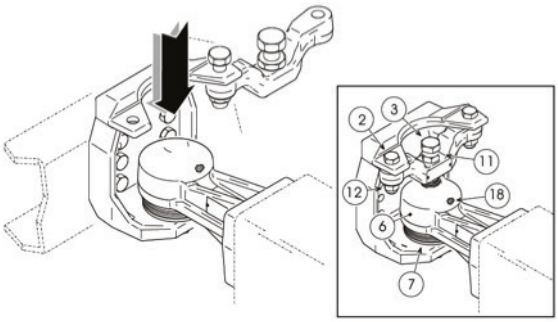

Step 6. Protect Coupling Ball and Anchor Edge onto Ball

- Protect the part that is still visible of the coupling ball (5) with the rubber dust proof bellows protection cover (7). Accurately anchor the edge directly onto the ball itself.

Step 7. Lubricate the Drawbar Eye

- Lubricate the inside of the drawbar eye ball cup (6) directly through the grease nipple (18).

6.4.6 - Uncoupling a Drawbar

Step 1. Turn Trailer Brake On

- Make sure that the trailer brake is on.

Step 2. Remove Cover and Loosen Screws

- Remove the rubber dust proof bellows protection cover (7).
- Loosen the adjustment screw (3) and the counter nut (11).
- Loosen safety lock screw (2a) and remove safety lock screw (2) together with its self-locking nut (12).

Step 3. Rotate Safety Cover Bar and Lift Trailer Drawbeam

- Rotate the safety cover bar (4) outwards so that it is completely open.
- Lift the trailer drawbeam until the drawbar coupling ball (5) is fully visible, then travel forward with the trailer very slowly.
- Rotate the safety cover bar inwards (4) until it lodges back in its housing.

Step 4. Lock Safety Screw and Tighten Self-Locking Nut

- Fit in safety lock screw (2) and tighten in self-locking nut (12).

6.4.7 - Coupling a Gooseneck Hitch

- If you are hooking up a Gooseneck or a fifth wheel hitch, the procedure is a little different from a receiver and ball, but it is not more difficult.

Step 1. Open the Latch and Lubricate the Gooseneck Ball

- Open the clamp latch on the Gooseneck coupler.
- Make sure that the Gooseneck ball is properly lubricated.

Step 2. Position Coupler and Latch the Clamp

- Position the trailer's coupler directly over the ball and lower the Gooseneck trailer into position and latch the clamp.

Step 3. Attach Safety Chains

- Attach your safety chains. Remember that all trailers are required by law to have safety chains.

Step 4. Connect Trailer Light Wiring

- Connect your trailer light wiring to your vehicle's connector.
- Check all of your lights, including your brake lights.

Step 5. Lower and Stow the Trailer Jacks

- Completely lower and stow the trailer jacks, allowing the weight to settle onto the tow vehicle.

6.4.8 Uncoupling a Gooseneck Hitch

Step 1. Remove Safety Pin and Clip

- Simply remove safety pin and clip.

Step 2. Rotate Handle and Raise Trailer Off Ball

- Rotate handle to this position (Fig. B) and raise trailer off ball. Coupler will return to load position automatically.

Step 3. Install Safety Pin and Clip

- Install safety pin and clip. (Fig. B)

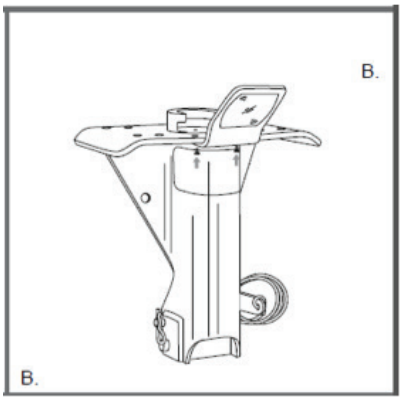

6.5 – Inspecting a Combination Vehicle

Use the seven-step inspection procedure described in Section 2 to inspect your combination vehicle. There are more things to inspect on a combination vehicle than on a single vehicle. (For example, tires, wheels, lights, reflectors, etc.) However, there are also some new things to check. These are discussed below.

6.5.1 – Additional Things to Check during a Walk-around Inspection

Do these checks in addition to those already listed in Section 2.

Coupling System Areas

- Check fifth wheel (lower).
  - Securely mounted to frame.
  - No missing or damaged parts.
  - Enough grease.
  - No visible space between upper and lower fifth wheel.
  - Locking jaws around the shank, not the head of kingpin. See Figure 6.8.
  - Release arm properly seated and safety latch/lock engaged.

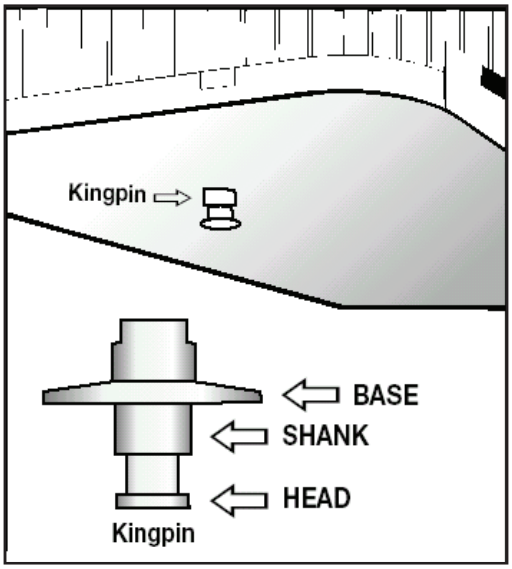

Figure 6.8

Check fifth wheel (upper).

- Glide plate securely mounted to trailer frame.
- Kingpin not damaged.

Air and electric lines to trailer.

- Electrical cord firmly plugged in and secured.
- Air-lines properly connected to glad hands, no air leaks, properly secured with enough slack for turns.
- All lines free from damage.

Sliding fifth wheel.

- Slide not damaged or parts missing.
- Properly greased.
- All locking pins present and locked in place.
- If air powered--no air leaks.
- Check that fifth wheel is not so far forward that tractor frame will hit landing gear, or the cab hit the trailer, during turns.

Landing Gear

- Fully raised, no missing parts, not bent or otherwise damaged.
- Crank handle in place and secured.
- If power operated, no air or hydraulic leaks.

6.5.2 – Combination Vehicle Brake Check

Do these checks in addition to Section 5.3: Inspecting Air Brake Systems.

The following section explains how to check air brakes on combination vehicles. Check the brakes on a double or triple trailer as you would any combination vehicle.

Check That Air Flows to All Trailers. Use the tractor parking brake and/or chock the wheels to hold the vehicle. Wait for air pressure to reach normal, then push in the red "trailer air supply" knob. This will supply air to the emergency (supply) lines. Use the trailer handbrake to provide air to the service line. Go to the rear of the rig. Open the emergency line shut-off valve at the rear of the last trailer. You should hear air escaping, showing the entire system is charged. Close the emergency line valve. Open the service line valve to check that service pressure goes through all the trailers (this test assumes that the trailer handbrake or the service brake pedal is on), and then close the valve. If you do NOT hear air escaping from both lines, check that the shut-off valves on the trailer(s) and dolly(ies) are in the OPEN position. You MUST have air all the way to the back for all the brakes to work.

Test Tractor Protection Valve. Charge the trailer Air-brake system. (That is, build up normal air-pressure and push the "air supply" knob in.) Shut the engine off. Step on and off the brake pedal several times to reduce the air pressure in the tanks. The trailer air supply control (also called the tractor protection valve control) should pop out (or go from "normal" to "emergency" position) when the air pressure falls into the pressure range specified by the manufacturer. (Usually within the range of 20 to 45 psi.)

If the tractor protection valve doesn't work right, an air hose or trailer brake leak could drain all the air from the tractor. This would cause the emergency brakes to come on, with possible loss of control.

Test Trailer Emergency Brakes. Charge the trailer air brake system and check that the trailer rolls freely. Then stop and pull out the trailer air supply control (also called tractor protection valve control or trailer emergency valve), or place it in the "emergency" position. Pull gently on the trailer with the tractor to check that the trailer emergency brakes are on.

Test Trailer Service Brakes. Check for normal air pressure, release the parking brakes, move the vehicle forward slowly, and apply trailer brakes with the hand control (trolley valve), if so equipped. You should feel the brakes come on. This tells you the trailer brakes are connected and working. (The trailer brakes should be tested with the hand valve but controlled in normal operation with the foot pedal, which applies air to the service brakes at all wheels.)

Subsection 6.5
Test Your Knowledge

1. Which shut-off valves should be open and which closed?
2. How can you test that air flows to all trailers?
3. How can you test the tractor protection valve?
4. How can you test the trailer emergency brakes?
5. How can you test the trailer service brakes?

These questions may be on your test. If you can't answer all of them, re-read subsection 6.5.

Section 7
DOUBLES AND TRIPLES

This Section Covers

- **Pulling Double/Triple Trailers**
- **Coupling and Uncoupling**
- **Inspecting Doubles and Triples**
- **Checking Air Brakes**

This section has information you need to pass the CDL knowledge test for driving safely with double and triple trailers. It tells about how important it is to be very careful when driving with more than one trailer, how to couple and uncouple correctly, and about inspecting doubles and triples carefully. (You should also study Sections 2, 5, and 6.)

7.1 – Pulling Double/Triple Trailers

Take special care when pulling two and three trailers. There are more things that can go wrong, and doubles/triples are less stable than other commercial vehicles. Some areas of concern are discussed below.

7.1.1 – Prevent Trailer from Rolling Over

To prevent trailers from rolling over, you must steer gently and go slowly around corners, on ramps, off ramps, and curves. A safe speed on a curve for a straight truck or a single trailer combination vehicle may be too fast for a set of doubles or triples.

7.1.2 – Beware of the Crack-the-whip Effect

Doubles and triples are more likely to turn over than other combination vehicles because of the "crack-the-whip" effect. You must steer gently when pulling trailers. The last trailer in a combination is most likely to turn over. If you don't understand the crack-the-whip effect, study subsection 6.1.2 of this manual.

7.1.3 – Inspect Completely

There are more critical parts to check when you have two or three trailers. Check them all. Follow the procedures described later in this section.

7.1.4 – Look Far Ahead

Doubles and triples must be driven very smoothly to avoid rollover or jackknife. Therefore, look far ahead so you can slow down or change lanes gradually when necessary.

7.1.5 – Manage Space

Doubles and triples take up more space than other commercial vehicles. They are not only longer, but also need more space because they can't be turned or stopped suddenly. Allow more following distance. Make sure you have large enough gaps before entering or crossing traffic. Be certain you are clear at the sides before changing lanes.

7.1.6 – Adverse Conditions

Be more careful in adverse conditions. In bad weather, slippery conditions, and mountain driving, you must be especially careful if you drive double and triple bottoms. You will have greater length and more dead axles to pull with your drive axles than other drivers. There is more chance for skids and loss of traction.

7.1.7 – Parking the Vehicle

Make sure you do not get in a spot you cannot pull straight through. You need to be aware of how parking lots are arranged in order to avoid a long and difficult escape.

7.1.8 – Antilock Braking Systems on Converter Dollies

Converter dollies built on or after March 1, 1998, are required to have antilock brakes. These dollies will have a yellow lamp on the left side of the dolly.

7.2 – Coupling and Uncoupling

Knowing how to couple and uncouple correctly is basic to safe operation of doubles and triples. Wrong coupling and uncoupling can be very dangerous. Coupling and uncoupling steps for doubles and triples are listed below.

7.2.1 – Coupling Twin Trailers

Secure Second (Rear) Trailer

If the second trailer doesn't have spring brakes, drive the tractor close to the trailer, connect the emergency line, charge the trailer air tank, and disconnect the emergency line. This will set the trailer emergency brakes (if the slack adjusters are correctly adjusted). Chock the wheels if you have any doubt about the brakes.

For the safest handling on the road, the more heavily loaded semitrailer should be in first position behind the tractor. The lighter trailer should be in the rear.

A converter gear on a dolly is a coupling device of one or two axles and a fifth wheel by which a semitrailer can be coupled to the rear of a tractor-trailer combination forming a double bottom rig. See Figure 7.1.

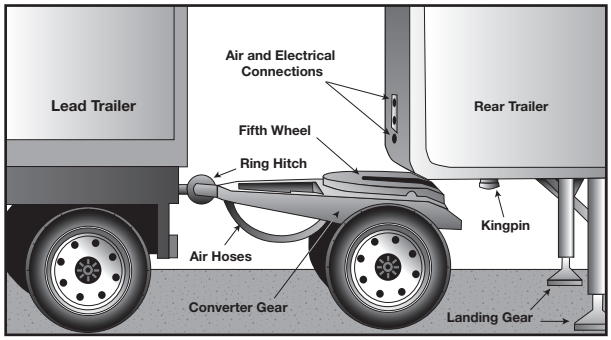

Figure 7.1

Position Converter Dolly in Front of Second (Rear) Trailer

Release dolly brakes by opening the air tank petcock. (Or, if the dolly has spring brakes, use the dolly parking brake control.)

If the distance is not too great, wheel the dolly into position by hand so it is in line with the kingpin.

Or, use the tractor and first semitrailer to pick up the converter dolly:

- Position combination as close as possible to converter dolly.
- Move dolly to rear of first semitrailer and couple it to the trailer.
- Lock pintle hook.
- Secure dolly support in raised position.
- Pull dolly into position as close as possible to nose of the second semitrailer.
- Lower dolly support.
- Unhook dolly from first trailer.
- Wheel dolly into position in front of second trailer in line with the kingpin.

Connect Converter Dolly to Front Trailer

- Back first semitrailer into position in front of dolly tongue.
- Hook dolly to front trailer.
- Lock pintle hook.
- Secure converter gear support in raised position.

Connect Converter Dolly to Rear Trailer

- Make sure trailer brakes are locked and/or wheels chocked.
- Make sure trailer height is correct. (It must be slightly lower than the center of the fifth wheel, so trailer is raised slightly when dolly is pushed under.)
- Back converter dolly under rear trailer.
- Raise landing gear slightly off ground to prevent damage if trailer moves.
- Test coupling by pulling against pin of the second semitrailer.
- Make visual check of coupling. (No space between upper and lower fifth wheel. Locking jaws closed on kingpin.)
- Connect safety chains, air hoses, and light cords.
- Close converter dolly air tank petcock and shut-off valves at rear of second trailer (service and emergency shut-offs).
- Open shut-off valves at rear of first trailer (and on dolly if so equipped).
- Raise landing gear completely.
- Charge trailer brakes (push "air supply" knob in), and check for air at rear of second trailer by opening the emergency line shut-off. If air pressure isn't there, something is wrong and the brakes won't work.

7.2.2 – Uncoupling Twin Trailers

Uncouple Rear Trailer

- Park rig in a straight line on firm level ground.
- Apply parking brakes so rig won't move.
- Chock wheels of second trailer if it doesn't have spring brakes.
- Lower landing gear of second semitrailer enough to remove some weight from dolly.
- Close air shut-offs at rear of first semitrailer (and on dolly if so equipped).
- Disconnect all dolly air and electric lines and secure them.
- Release dolly brakes.
- Release converter dolly fifth wheel latch.
- Slowly pull tractor, first semitrailer, and dolly forward to pull dolly out from under rear semitrailer.

Uncouple Converter Dolly

- Lower dolly landing gear.
- Disconnect safety chains.
- Apply converter gear spring brakes or chock wheels.
- Release pintle hook on first semi-trailer.
- Slowly pull clear of dolly.
- Never unlock the pintle hook with the dolly still under the rear trailer. The dolly tow bar may fly up, possibly causing injury, and making it very difficult to re-couple.

7.2.3 – Coupling and Uncoupling Triple Trailers

Couple Tractor/First Semitrailer to Second/ Third Trailers

- Couple tractor to first trailer. Use the method already described for coupling tractor-semitrailers.
- Move converter dolly into position and couple first trailer to second trailer using the method for coupling doubles. Triples rig is now complete.

Uncouple Triple-trailer Rig

- Uncouple third trailer by pulling the dolly out, then unhitching the dolly using the method for uncoupling doubles.
- Uncouple remainder of rig as you would any double-bottom rig using the method already described.

7.2.4 – Coupling and Uncoupling Other Combinations

The methods described so far apply to the more common tractor-trailer combinations. However, there are other ways of coupling and uncoupling the many types of truck-trailer and tractor-trailer combinations that are in use. There are too many to cover in this manual. You will need to learn the correct way to couple and uncouple the vehicle(s) you will drive according to the manufacturer and/or owner specifications.

7.3 – Inspecting Doubles and Triples

Use the seven-step inspection procedure described in Section 2 to inspect your combination vehicle. There are more things to inspect on a combination vehicle than on a single vehicle. Many of these items are simply more of what you would find on a single vehicle. (For example, tires, wheels, lights, reflectors, etc.) However, there are also some new things to check. These are discussed below.

7.3.1 – Additional Checks

Do these checks in addition to those already listed in Section 2, Step 5: Do a Walk-around Inspection.

- Coupling System Areas
  - Check fifth wheel (lower).
  - Securely mounted to frame.
  - No missing or damaged parts.
  - Enough grease.
  - No visible space between upper and lower fifth wheel.
  - Locking jaws around the shank, not the head of kingpin.
  - Release arm properly seated and safety latch/lock engaged.
  - Check fifth wheel (upper).
  - Glide plate securely mounted to trailer frame.
  - Kingpin not damaged.
  - Air and electric lines to trailer.
  - Electrical cord firmly plugged in and secured.
  - Air-lines properly connected to glad hands, no air leaks, properly secured with enough slack for turns.
  - All lines free from damage.
  - Sliding fifth wheel.
  - Slide not damaged or parts missing.
  - Properly greased.
  - All locking pins present and locked in place.
  - If air powered, no air leaks.
  - Check that fifth wheel is not so far forward that the tractor frame will hit landing gear, or cab will hit the trailer, during turns.

Landing Gear

- Fully raised, no missing parts, not bent or otherwise damaged.
- Crank handle in place and secured.
- If power operated, no air or hydraulic leaks.

Double and Triple Trailers

- Shut-off valves (at rear of trailers, in service and emergency lines).
  - Rear of front trailers: OPEN.
  - Rear of last trailer: CLOSED.
  - Converter dolly air tank drain valve: CLOSED.
- Be sure air-lines are supported and glad hands are properly connected.
- If spare tire is carried on converter gear (dolly), make sure it's secured.
- Be sure pintle-eye of dolly is in place in pintle hook of trailer(s).
- Make sure pintle hook is latched.
- Safety chains should be secured to trailer(s).
- Be sure light cords are firmly in sockets on trailers.

7.3.2 – Additional Things to Check during a Walk-around Inspection

Do these checks in addition to subsection 5.3, Inspecting Air Brake Systems.

7.4 – Doubles/Triples Air Brake Check

Check the brakes on a double or triple trailer as you would any combination vehicle. Subsection 6.5.2 explains how to check air brakes on combination vehicles. You must also make the following checks on your double or triple trailers

7.4.1 – Additional Air Brake Checks

Check That Air Flows to All Trailers (Double and Triple Trailers). Use the tractor parking brake and/or chock the wheels to hold the vehicle. Wait for air pressure to reach normal, then push in the red "trailer air supply" knob. This will supply air to the emergency (supply) lines. Use the trailer handbrake to provide air to the service line. Go to the rear of the rig. Open the emergency line shut-off valve at the rear of the last trailer. You should hear air escaping, showing the entire system is charged. Close the emergency line valve. Open the service line valve to check that service pressure goes through all the trailers (this test assumes that the trailer handbrake or the service brake pedal is on), and then close the valve. If you do NOT hear air escaping from both lines, check that the shut-off valves on the trailer(s) and dolly(ies) are in the OPEN position. You MUST have air all the way to the back for all the brakes to work.

Test Tractor Protection Valve. Charge the trailer air brake system. (That is, build up normal air pressure and push the "air supply" knob in.) Shut the engine off. Step on and off the brake pedal several times to reduce the air pressure in the tanks. The trailer air supply control (also called the tractor protection valve control) should pop out (or go from "normal" to "emergency" position) when the air pressure falls into the pressure range specified by the manufacturer. (Usually within the range of 20 to 45 psi.)

If the tractor protection valve doesn't work properly, an air hose or trailer brake leak could drain all the air from the tractor. This would cause the emergency brakes to come on, with possible loss of control.

Test Trailer Emergency Brakes. Charge the trailer air brake system and check that the trailer rolls freely. Then stop and pull out the trailer air supply control (also called tractor protection valve control or trailer emergency valve) or place it in the "emergency" position. Pull gently on the trailer with the tractor to check that the trailer emergency brakes are on.

Test Trailer Service Brakes. Check for normal air pressure, release the parking brakes, move the vehicle forward slowly, and apply trailer brakes with the hand control (trolley valve), if so equipped. You should feel the brakes come on. This tells you the trailer brakes are connected and working. (The trailer brakes should be tested with the hand valve, but controlled in normal operation with the foot pedal, which applies air to the service brakes at all wheels.)

Section 7
Test Your Knowledge

1.What is a converter dolly?
2. Do converter dollies have spring brakes?
3. What three methods can you use to secure a second trailer before coupling?
4. How do you check to make sure trailer height is correct before coupling?
5. What do you check when making a visual check of coupling?
6. Why should you pull a dolly out from under a trailer before you disconnect it from the trailer in front?
7. What should you check for when inspecting the converter dolly? The pintle hook?
8. Should the shut-off valves on the rear of the last trailer be open or closed? On the first trailer in a set of doubles? On the middle trailer of a set of triples?
9. How can you test that air flows to all trailers?
10. How do you know if your converter dolly is equipped with antilock brakes?

These questions may be on your test. If you can't answer them all, re-read Section 7.

Section 8
TANK VEHICLES

This Section Covers

- **Inspecting Tank Vehicles**
- **Driving Tank Vehicles**
- **Safe Driving Rules**

This section has information needed to pass the CDL knowledge test for driving a tank vehicle. (You should also study Sections 2, 5, 6, and 9). A tank endorsement is required for certain vehicles that transport liquids or gases. The liquid or gas does not have to be a hazardous material. A tank endorsement is required if your vehicle needs a Class A or B CDL and you want to haul a liquid or liquid gas in a tank or tanks having an individual rated capacity of more than 119 gallons and an aggregate rated capacity of 1000 gallons or more that is either permanently or temporarily attached to the vehicle or the chassis. A tank endorsement is also required for Class C vehicles when the vehicle is used to transport hazardous materials in liquid or gas form in the above described rated tanks.

Before loading, unloading, or driving a tanker, inspect the vehicle. This makes sure that the vehicle is safe to carry the liquid or gas and is safe to drive.

8.1 – Inspecting Tank Vehicles

Tank vehicles have special items that you need to check. Tank vehicles come in many types and sizes. You need to check the vehicle's operator manual to make sure you know how to inspect your tank vehicle.

8.1.1 – Leaks

On all tank vehicles, the most important item to check for is leaks. Check under and around the vehicle for signs of any leaking. Don't carry liquids or gases in a leaking tank. To do so is a crime. You will be cited and prevented from driving further. You may also be liable for the clean-up of any spill. In general, check the following:

- Check the tank's body or shell for dents or leaks.
- Check the intake, discharge, and cut-off valves. Make sure the valves are in the correct position before loading, unloading, or moving the vehicle.
- Check pipes, connections, and hoses for leaks, especially around joints.
- Check manhole covers and vents. Make sure the covers have gaskets and they close correctly. Keep the vents clear so they work correctly.

8.1.2 – Check Special Purpose Equipment

If your vehicle has any of the following equipment, make sure it works:

- Vapor recovery kits.
- Grounding and bonding cables.
- [a] Emergency shut-off systems.
- Built in fire extinguisher.

Never drive a tank vehicle with open valves or manhole covers.

8.1.3 – Special Equipment

Check the emergency equipment required for your vehicle. Find out what equipment you're required to carry and make sure you have it (and it works).

8.2 – Driving Tank Vehicles

Hauling liquids in tanks requires special skills because of the high center of gravity and liquid movement. See Figure 8.1.

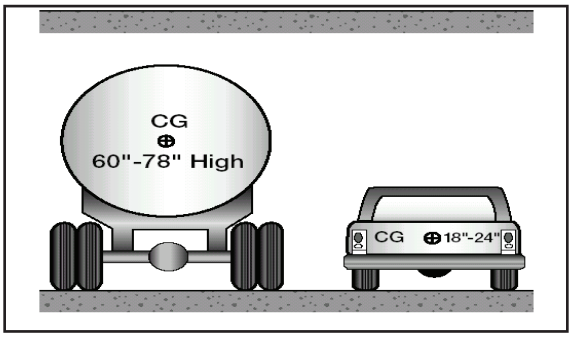

Figure 8.1

8.2.1 – High Center of Gravity

High center of gravity means that much of the load's weight is carried high up off the road. This makes the vehicle top-heavy and easy to roll over. Liquid tankers are especially easy to roll over. Tests have shown that tankers can turn over at the speed limits posted for curves. Take highway curves and on ramp/off ramp curves well below the posted speeds.

8.2.2 – Danger of Surge

Liquid surge results from movement of the liquid in partially filled tanks. This movement can have bad effects on handling. For example, when coming to a stop, the liquid will surge back and forth. When the wave hits the end of the tank, it tends to push the truck in the direction the wave is moving. If the

truck is on a slippery surface such as ice, the wave can shove a stopped truck out into an intersection. The driver of a liquid tanker must be very familiar with the handling of the vehicle.

8.2.3 – Bulkheads

Some liquid tanks are divided into several smaller tanks by bulkheads. When loading and unloading the smaller tanks, the driver must pay attention to weight distribution. Don't put too much weight on the front or rear of the vehicle.

8.2.4 – Baffled Tanks

Baffled liquid tanks have bulkheads in them with holes that let the liquid flow through. The baffles help to control the forward and backward liquid surge. Side-to-side surge can still occur. This can cause a roll over.

8.2.5 – Un-baffled Tanks

Un-baffled liquid tankers (sometimes called "smooth bore" tanks) have nothing inside to slow down the flow of the liquid. Therefore, forward-and-back surge is very strong. Un-baffled tanks are usually those that transport food products (milk, for example). (Sanitation regulations forbid the use of baffles because of the difficulty in cleaning the inside of the tank.) Be extremely cautious (slow and careful) in driving smooth bore tanks, especially when starting and stopping.

8.2.6 – Outage

Never load a cargo tank totally full. Liquids expand as they warm and you must leave room for the expanding liquid. This is called "outage." Since different liquids expand by different amounts, they require different amounts of outage. You must know the outage requirement when hauling liquids in bulk.

8.2.7 – How Much to Load?

A full tank of dense liquid (such as some acids) may exceed legal weight limits. For that reason, you may often only partially fill tanks with heavy liquids. The amount of liquid to load into a tank depends on:

- The amount the liquid will expand in transit.
- The weight of the liquid.
- Legal weight limits.

8.3 – Safe Driving Rules

In order to drive tank vehicles safely, you must remember to follow all the safe driving rules. A few of these rules are:

8.3.1 – Drive Smoothly

Because of the high center of gravity and the surge of the liquid, you must start, slow down, and stop very smoothly. Also, make smooth turns and lane changes.

8.3.2 – Controlling Surge

Keep a steady pressure on the brakes. Do not release too soon when coming to a stop.

Brake far in advance of a stop and increase your following distance.

If you must make a quick stop to avoid a crash, use controlled or stab braking. If you do not remember how to stop using these methods, review subsection 2.17.2. Also, remember that if you steer quickly while braking, your vehicle may roll over.

8.3.3 – Curves

Slow down before curves, then accelerate slightly through the curve. The posted speed for a curve may be too fast for a tank vehicle.

8.3.4 – Stopping Distance

Keep in mind how much space you need to stop your vehicle. Remember that wet roads double the normal stopping distance. Empty tank vehicles may take longer to stop than full ones.

8.3.5 – Skids

Don't over steer, over accelerate, or over brake. If you do, your vehicle may skid. On tank trailers, if your drive wheels or trailer wheels begin to skid, your vehicle may jackknife. When any vehicle starts to skid, you must take action to restore traction to the wheels.

Section 8
Test Your Knowledge

1. How are bulkheads different than baffles?
2. Should a tank vehicle take curves, on ramps, or off ramps at the posted speed limits?
3. How are smooth bore tankers different to drive than those with baffles?
4. What three things determine how much liquid you can load?
5. What is outage?
6. How can you help control surge?
7. What two reasons make special care necessary when driving tank vehicles?

These questions may be on the test. If you can't answer them all, re-read Section 8.

Section 9
HAZARDOUS MATERIALS

This Section Covers

- **The Intent of the Regulations**
- **Bulk Tank Loading, Unloading, and Marking**
- **Driver Responsibilities**
- **Driving and Parking Rules**
- **Communications Rules**
- **Emergencies**
- **Loading and Unloading**

Hazardous materials are products that pose a risk to health, safety, and property during transportation. The term often is shortened to HAZMAT, which you may see on road signs, or to HM in government regulations. Hazardous materials include explosives, various types of gas, solids, flammable and combustible liquid, and other materials. Because of the risks involved and the potential consequences these risks impose, all levels of government regulate the handling of hazardous materials.

The Hazardous Materials Regulations (HMR) is found in parts 171 - 180 of title 49 of the Code of Federal Regulations. The common reference for these regulations is 49 CFR 171 - 180

The Hazardous Materials Table in the regulations contains a list of these items. However, this list is not all-inclusive. Whether or not a material is considered hazardous is based on its characteristics and the shipper's decision on whether or not the material meets a definition of a hazardous material in the regulations.

The regulations require vehicles transporting certain types or quantities of hazardous materials to display diamond-shaped, square on point, warning signs called placards.

This section is designed to assist you in understanding your role and responsibilities in hauling hazardous materials. Due to the constantly changing nature of government regulations, it is impossible to guarantee absolute accuracy of the materials in this section. An up-to-date copy of the complete regulations is essential for you to have. Included in these regulations is a complete glossary of terms.

You must have a commercial driver license (CDL) with a hazardous materials endorsement before you drive any size vehicle that is used to transport hazardous material as defined in 49 CFR 383.5. You must pass a written test about the regulations and requirements to get this endorsement.

Everything you need to know to pass the written test is in this section. However, this is only a beginning. Most drivers need to know much more on the job. You can learn more by reading and understanding the federal and state rules applicable to hazardous materials, as well as, attending hazardous materials training courses. Your employer, colleges and universities, and various associations usually offer these courses. You can get copies of the Federal Regulations (49 CFR) through your local Government Printing Office bookstore and various industry publishers. Union or company offices often have copies of the rules for driver use. Find out where you can get your own copy to use on the job.

The regulations require training and testing for all drivers involved in transporting hazardous materials. Your employer or a designated representative is required to provide this training and testing. Hazardous materials employers are required to keep a record of training for each employee as long as that employee is working with hazardous materials, and for 90 days thereafter. The regulations require that hazardous materials employees be trained and tested at least once every three years.

All drivers must be trained in the security risks of hazardous materials transportation. This training must include how to recognize and respond to possible security threats.

The regulations also require that drivers have special training before driving a vehicle transporting certain flammable gas materials or highway route controlled quantities of radioactive materials. In addition, drivers transporting cargo tanks and portable tanks must receive specialized training. Each driver's employer or his or her designated representative must provide such training.

Some locations require permits to transport certain explosives or bulk hazardous wastes. States and counties also may require drivers to follow special hazardous materials routes. The federal government may require permits or exemptions for special hazardous materials cargo such as rocket fuel. Find out about permits, exemptions, and special routes for the places you drive.

9.1 – The Intent of the Regulations

9.1.1 – Contain the Material

Transporting hazardous materials can be risky. The regulations are intended to protect you, those around you, and the environment. They tell shippers how to package the materials safely and drivers how to load, transport, and unload the material. These are called "containment rules."

9.1.2 – Communicate the Risk

To communicate the risk, shippers must warn drivers and others about the material's hazards. The regulations require shippers to put hazard warning labels on packages, provide proper shipping papers, emergency response information, and placards. These steps communicate the hazard to the shipper, the carrier, and the driver.

9.1.3 – Assure Safe Drivers and Equipment

In order to get a hazardous materials endorsement on a CDL, you must pass a written test about transporting hazardous materials. To pass the test, you must know how to:

- Identify what are hazardous materials.
- Safely load shipments.
- Properly placard your vehicle in accordance with the rules.
- Safely transport shipments.

Learn the rules and follow them. Following the rules reduces the risk of injury from hazardous materials. Taking shortcuts by breaking rules is unsafe. Non-compliance with regulations can result in fines and jail.

Inspect your vehicle before and during each trip. Law enforcement officers may stop and inspect your vehicle. When stopped, they may check your shipping papers, vehicle placards, and the hazardous materials endorsement on your driver license, and your knowledge of hazardous materials.

9.2 – Hazardous Materials Transportation — Who Does What

9.2.1 – The Shipper

- Sends products from one place to another by truck, rail, vessel, or airplane.
- Uses the hazardous materials regulations to determine the product's:
- Identification number
- Proper shipping name.
- Hazard class.
- Packing group.
- Correct packaging.
- Correct label and markings.
- Correct placards.
- Must package, mark, and label the materials; prepare shipping papers; provide emergency response information; and supply placards.
- Certify on the shipping paper that the shipment has been prepared according to the rules (unless you are pulling cargo tanks supplied by you or your employer).

9.2.2 – The Carrier

- Takes the shipment from the shipper to its destination.
- Prior to transportation, checks that the shipper correctly described, marked, labeled, and otherwise prepared the shipment for transportation.
- Refuses improper shipments.
- Reports accidents and incidents involving hazardous materials to the proper government agency.

9.2.3 – The Driver

- Makes sure the shipper has identified, marked, and labeled the hazardous materials properly.
- Refuses leaking packages and shipments.
- Placards vehicle when loading, if required.
- Safely transports the shipment without delay.
- Follows all special rules about transporting hazardous materials.
- Keeps hazardous materials shipping papers and emergency response information in the proper place.

9.3 – Communication Rules

9.3.1 – Definitions

Some words and phrases have special meanings when talking about hazardous materials. Some of these may differ from meanings you are used to. The words and phrases in this section may be on your test. The meanings of other important words are in the glossary at the end of Section 9.

A material's hazard class reflects the risks associated with it. There are nine different hazard classes. The types of materials included in these nine classes are in Figure 9.1.

Hazardous Materials Class			
Class	**Division**	**Name of Class or Division**	**Examples**
1	1.1 1.2 1.3 1.4 1.5 1.6	Mass Explosion Projection Hazard Fire Hazard Minor Explosion Very Insensitive Extremely Insensitive	Dynamite Flares Display Fireworks Ammunition Blasting Agents Explosive Devices
2	2.1 2.2 2.3	Flammable Gases Non-Flammable Gases Poisonous/Toxic Gases	Propane Helium Fluorine, Compressed
3	–	Flammable Liquids	Gasoline
4	4.1 4.2 4.3	Flammable Solids Spontaneously Combustible Dangerous When Wet	Ammonium Picrate, Wetted White Phosphorus Sodium
5	5.1 5.2	Oxidizers Organic Peroxides	Ammonium Nitrate Methyl Ethyl Ketone Peroxide
6	6.1 6.2	Poison (Toxic Material) Infectious Substances	Potassium Cyanide Anthrax Virus
7	–	Radioactive	Uranium
8	–	Corrosives	Battery Fluid
9	–	Miscellaneous Hazardous Materials	Polychlorinated Biphenyls (PCB)
None	–	ORM-D (Other Regulated Material-Domestic)	Food Flavorings, Medicines
	–	Combustible Liquids	Fuel Oil

Figure 9.1

A shipping paper describes the hazardous materials being transported. Shipping orders, bills of lading, and manifests are all shipping papers. Figure 9.6 shows an example shipping paper.

After an accident or hazardous materials spill or leak, you may be injured and unable to communicate the hazards of the materials you are transporting. Firefighters and police can prevent or reduce the amount of damage or injury at the scene if they know what hazardous materials are being carried. Your life, and the lives of others, may depend on quickly locating the hazardous materials shipping papers. For that reason the rules require:

- Shippers to describe hazardous materials correctly and include an emergency response telephone number on shipping papers.
- Carriers and drivers to quickly identify hazardous materials shipping papers, or keep them on top of other shipping papers and keep the required emergency response information with the shipping papers.
- Drivers to keep hazardous materials shipping papers:
  - In a pouch on the driver's door, or
  - In clear view within immediate reach while the seat belt is fastened while driving, or
  - On the driver's seat when out of the vehicle.

9.3.2 – Package Labels

Shippers put diamond-shaped hazard warning labels on most hazardous materials packages. These labels inform others of the hazard. If the diamond label won't fit on the package, shippers may put the label on a tag securely attached to the package. For example, compressed gas cylinders that will not hold a label will have tags or decals. Labels look like the examples in Figure 9.2.

Examples of HAZMAT Labels. Figure 9.2

9.3.3 – Lists of Regulated Products

Placards. Placards are used to warn others of hazardous materials. Placards are signs put on the outside of a vehicle and on bulk packages, which identify the hazard class of the cargo. A placarded vehicle must have at least four identical placards.

They are put on the front, rear, and both sides of the vehicle. See Figure 9.3. Placards must be readable from all four directions. They are at least 250mm 9.84 inches square, square-on-point, in a diamond shape. Cargo tanks and other bulk packaging display the identification number of their contents on placards or orange panels or white square-on-point displays that are the same size as placards.

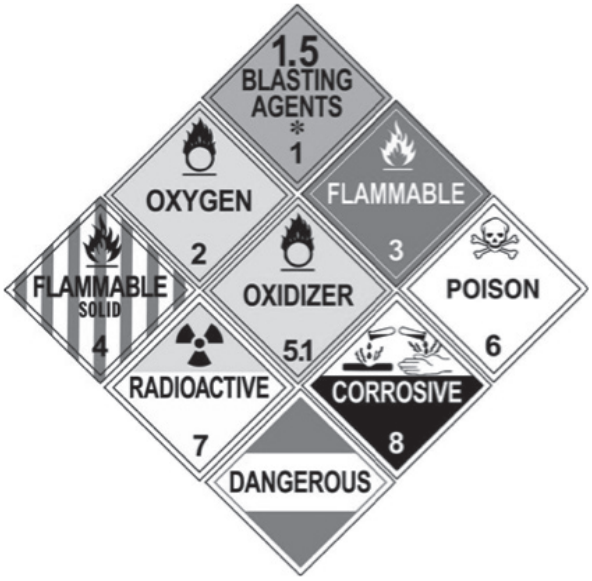

Examples of HAZMAT Placards. Figure 9.3

Identification numbers are a four-digit code used by first responders to identify hazardous materials. An identification number may be used to identify more than one chemical. The letters "NA or "UN" will precede the identification number. The United States Department of Transportation's Emergency Response Guidebook (ERG) lists the chemicals and the identification numbers assigned to them.

There are three main lists used by shippers, carriers, and drivers when trying to identify hazardous materials. Before transporting a material, look for its name on three lists. Some materials are on all lists, others on only one. Always check the following lists:

- Section 172.101, the Hazardous Materials Table.
- Appendix A to Section 172.101, the List of Hazardous Substances and Reportable Quantities.
- Appendix B to Section 172.101, the List of Marine Pollutants.

The Hazardous Materials Table. Figure 9.4 shows part of the Hazardous Materials Table.

Column 1 tells which shipping mode(s) the entry affects and other information concerning the shipping description. The next five columns show each material's shipping name, hazard class or division, identification number, packaging group, and required labels.

Six different symbols may appear in Column 1 of the table.

(+) Shows the proper shipping name, hazard class, and packing group to use, even if the material doesn't meet the hazard class definition.

(A) Means the hazardous material described in Column 2 is subject to the HMR only when offered or intended for transport by air unless it is a hazardous substance or hazardous waste.

(W) Means the hazardous material described in Column 2 is subject to the HMR only when offered or intended for transportation by water unless it is a hazardous substance, hazardous waste, or marine pollutant.

(D) Means the proper shipping name is appropriate for describing materials for domestic transportation, but may not be proper for international transportation.

(I) Identifies a proper shipping name that is used to describe materials in international transportation. A different shipping name may be used when only domestic transportation is involved.

(G) Means this hazardous material described in Column 2 is a generic shipping name. A generic shipping name must be accompanied by a technical name on the shipping paper. A technical name is a specific chemical that makes the product hazardous

Column 2 lists the proper shipping names and descriptions of regulated materials. Entries are in alphabetical order so you can more quickly find the right entry. The table shows proper shipping names in regular type. The shipping paper must show proper shipping names. Names shown in italics are not proper shipping names.

49 CFER 172.101 Hazardous Materials Table									
Symbols	Hazardous Materials Description & Proper Shipping Names	Hazard Class or Division	Identification Numbers	PG	Label Codes	Special Provisions (172.102)	Packaging (173.***)		
							Exceptions	Non Bulk	Bulk
(1)	(2)	(3)	(4)	(5)	(6)	(7)	(8A)	(8B)	(8C)
A	Acetaldehyde ammonia	9	UN1841	III	9	IB8, IP6	155	204	240

Figure 9.4

Appendix A to 49 CFR 172 List of Hazardous Substances and Reportable Quantities	
Hazardous Substances	Reportable Quantity (RQ) Pounds (Kilograms)
Phenyl mercaptan @	100 (45.4)
Phenylmercuric acetate	100 (45.4)
N-Phenylthiourea	100 (45.4)
Phorate	10 (4.54)
Phosgene	10 (4.54)
Phosphine	100 (45.4) *
Phosphoric acid	5,000 (2270)
Phosphoric acid, diethyl 4-nitrophenyl ester	100 (45.4)
Phosphoric acid, lead salt	10 (.454)
* Spills of 10 pounds or more must be reported.	

Figure 9.5

Column 3 shows a material's hazard class or division, or the entry "Forbidden." Never transport a "Forbidden" material. Placard hazardous materials shipments based on the quantity and hazard class. You can decide which placards to use if you know these three things:

- Material's hazard class.
- Amount being shipped.
- Amount of all hazardous materials of all classes on your vehicle.

Column 4 lists the identification number for each proper shipping name. Identification numbers are preceded by the letters "UN", "NA." or "ID". The letters "NA" are associated with proper shipping names that are only used within the United States and to and from Canada. The letters "ID" are associated with proper shipping names recognized by the International Civil Aviation Organization (IACO) Technical instructions for transportation by air. The identification number must appear on the shipping paper as part of the shipping description and also appear on the package. It also must appear on cargo tanks and other bulk packaging. Police and firefighters use this number to quickly identify the hazardous materials.

Column 5 shows the packing group (in Roman numeral) assigned to a material.

Column 6 shows the hazard warning label(s) shippers must put on packages of hazardous materials. Some products require use of more than one label due to a multiple hazards being present.

Column 7 lists the additional (special) provisions that apply to this material. When there is an entry in this column, you must refer to the federal regulations for specific information. The numbers 1-6 in this column mean the hazardous material is a poison inhalation hazard (PIH). PIH materials have special requirements for shipping papers, marking, and placards.

Column 8 is a three-part column showing the section numbers covering the packaging requirements for each hazardous material.

Note: Columns 9 and 10 do not apply to transportation by highway.

Appendix A to 49 CFR 172.101 - The List of Hazardous Substances and Reportable Quantities. The DOT and the EPA want to know about spills of hazardous substances. They are

named in the List of Hazardous Substances and Reportable Quantities. See Figure 9.5. Column 2 of the list shows each product's reportable quantity (RQ). When these materials are being transported in a reportable quantity or greater in one package, the shipper displays the letters RQ on the shipping paper and package. The letters RQ may appear before or after the basic description. You or your employer must report any spill of these materials, which occurs in a reportable quantity.

If the words INHALATION HAZARD appear on the shipping paper or package, the rules require display of the POISON INHALATION HAZARD or POISON GAS placards, as appropriate. These placards must be used in addition to other placards, which may be required by the product's hazard class. • Always display the hazard class placard and the POISON INHALATION HAZARD placard, even for small amounts.

Appendix B to 49 CFR 172.101 – List of Marine Pollutants Appendix B is a listing of chemicals that are toxic to marine life. For highway transportation, this list is only used for chemicals in a container with a capacity of 119 gallons or more without a placard or label as specified by the HMR.

Any bulk packages of a Marine Pollutant must display the Marine Pollutant marking (white triangle with a fish and an "X" through the fish). This marking (it is not a placard) must also be displayed on the outside of the vehicle. In addition, a notation must be made on the shipping papers near the description of the material: "Marine Pollutant".

9.3.4 – The Shipping Paper

The shipping paper shown in Figure 9.6 describes a shipment. A shipping paper for hazardous materials must include:

- Page numbers if the shipping paper has more than one page. The first page must tell the total number of pages. For example, "Page 1 of 4".
- A proper shipping description for each hazardous material.
- A shipper's certification, signed by the shipper, saying they prepared the shipment according to the regulations.

Shipping Paper				
TO:	ABC Corporation 88 Valley Street Anywhere VA	FROM:	DEF Corporation 55 Mountain Street Nowhere, CO	Page 1 of 1
Quantity	**HM**	**Description**		**Weight**
1 cylinder	RQ ("RQ" means that this is a reportable quantity.)	UN1076, Phosgene, 2.3, Poison, Inhalation Hazard, Zone A (UN1076 is the Identification Number from Column 4 of the Hazardous materials Table. Phosgene is the proper shipping name from Column 2 of the Hazardous Materials Table. 2.3 is the Hazard Class from Column 3 of the Hazardous Materials Table.)		25 lbs
This is to certify that the above named materials are properly classified, described, packaged marked and labeled, and are in proper condition for transportation according to the applicable regulations of the Department of Transportation.				
Shipper: Per: Date:	DEF Corporation Smith October 15, 2003		Carrier: Per: Date:	Safety First
Special Instructions: 24 hour Emergency Contact, John Smith 1-800-555-5555				

Figure 9.6

9.3.5 – The Item Description

If a shipping paper describes both hazardous and non-hazardous products, the hazardous materials must be:

- Entered first.
- Highlighted in a contrasting color, OR.
- Identified by an "X" placed before the shipping description (ID#, Shipping Name, Hazard Class, Packing Group) in a column captioned "HM". The letters "RQ" may be used instead of "X" if a reportable quantity needs to be identified.

The basic description of hazardous materials includes the identification number, proper shipping name, hazard class or division, and the packing

group, if any, in that order. The packing group is displayed in Roman numerals and may be preceded by "PG".

Identification number, shipping name, and hazard class must not be abbreviated unless specifically authorized in the hazardous materials regulations. The description must also show:

- The total quantity and unit of measure.
- The number and type of packages (example: "6 Drums").
- The letters RQ, if a reportable quantity.
- If the letters RQ appear, the name of the hazardous substance (if not included in the shipping name).
- For all materials with the letter "G" (Generic) in Column 1, the technical name of the hazardous material.

Shipping papers also must list an emergency response telephone number (unless excepted). The emergency response telephone number is the responsibility of the shipper. It can be used by emergency responders to obtain information about any hazardous materials involved in a spill or fire. The telephone number must be:

The number of the person offering the hazardous material for transportation (if the shipper/offerer is the emergency response information (ERI) provider); or

The number of an agency or organization capable of, and accepting responsibility for, providing the detailed information required by paragraph (a)(2) of this section. The person who is registered with the ERI provider must be identified by name, or contract number or other unique identifier assigned by the ERI provider, on the shipping paper

Shippers also must provide emergency response information to the motor carrier for each hazardous material being shipped. The emergency response information must be able to be used away from the motor vehicle and must provide information on how to safely handle incidents involving the material. At a minimum, it must include the following information:

- The basic description and technical name;
- Immediate hazards to health;
- Risks of fire or explosion;
- Immediate precautions to be taken in the event of an accident or incident;
- Immediate methods for handling fires;
- Initial methods for handling spills or leaks in the absence of fires; and
- Preliminary first aid measures

Such information can be on the shipping paper or some other document that includes the basic description and technical name of the hazardous material. Or, it may be in a guidance book such as the Emergency Response Guidebook (ERG). Motor carriers may assist shippers by keeping an ERG on each vehicle carrying hazardous materials. The driver must provide the emergency response information to any federal, state, or local authority responding to a hazardous materials incident or investigating one.

Total quantity and number & type of packages must appear before or after the basic description. The packaging type and the unit of measurement may be abbreviated. For example:

10 ctns. UN1263, Paint, 3, PG II, 500 lbs.

The shipper of hazardous wastes must put the word WASTE before the proper shipping name of the material on the shipping paper (hazardous waste manifest). For example:

UN1090, Waste Acetone, 3, PG II.

A non-hazardous material may not be described by using a hazard class or an identification number.

Shippers must keep a copy of shipping papers (or an electronic image) for a period of 2 years (3 years for hazardous waste) after the material is accepted by the initial carrier.

If one provides a carrier service only and is not the originator of the shipment, a carrier is required to keep a copy of the shipping paper (or an electronic image) for a period of 1 year.

IMPORTANT NOTE: To view complete regulatory requirements for the transportation of hazardous materials one should refer to the Code of Federal Regulations, Title 49, Parts 171-185.

9.3.6 – Shipper's Certification

When the shipper packages hazardous materials, he/she certifies that the package has been prepared according to the rules. The signed shipper's certification appears on the original shipping paper. The only exceptions are when a shipper is a private carrier transporting their own product and when the package is provided by the carrier (for example, a cargo tank). Unless a package is clearly unsafe or does not comply with the HMR, you may accept the shipper's certification concerning proper packaging. Some carriers have additional rules about transporting hazardous materials. Follow your employer's rules when accepting shipments.

9.3.7 – Package Markings and Labels

Shippers print required markings directly on the package, an attached label, or tag. An important package marking is the name of the hazardous material. It is the same name as the one on the shipping paper. The requirements for marking vary by package size and material being transported. When required, the shipper will put the following on the package:

- The name and address of shipper or consignee.
- The hazardous material's shipping name and identification number.
- The labels required.

It is a good idea to compare the shipping paper to the markings and labels. Always make sure that the shipper shows the correct basic description on the shipping paper, and verifies that the proper labels are shown on the packages. If you are not familiar with the material, ask the shipper to contact your office.

If rules require it, the shipper will put RQ, MARINE POLLUTANT, BIOHAZARD, HOT, or INHALATION-HAZARD on the package. Packages with liquid containers inside will also have package orientation markings with the arrows pointing in the correct upright direction. The labels used always reflect the hazard class of the product. If a package needs more than one label, the labels must be close together, near the proper shipping name.

9.3.8 – Recognizing Hazardous Materials

Learn to recognize shipments of hazardous materials. To find out if the shipment includes hazardous materials, look at the shipping paper. Does it have:

- An entry with a proper shipping name, hazard class, and identification number?
- A highlighted entry, or one with an X or RQ in the hazardous materials column?

Other clues suggesting hazardous materials:

- What business is the shipper in? Paint dealer? Chemical supply? Scientific supply house? Pest control or agricultural supplier? Explosives, munitions, or fireworks dealer?
- Are there tanks with diamond labels or placards on the premises?
- What type of package is being shipped? Cylinders and drums are often used for hazardous materials shipments.
- Is a hazard class label, proper shipping name, or identification number on the package?
- Are there any handling precautions?

9.3.9 – Hazardous Waste Manifest

When transporting hazardous wastes, you must sign by hand and carry a Uniform Hazardous Waste Manifest. The name and EPA registration number of the shippers, carriers, and destination must appear on the manifest. Shippers must prepare, date, and sign by hand the manifest. Treat the manifest as a shipping paper when transporting the waste. Only give the waste shipment to another registered carrier or disposal/treatment facility. Each carrier transporting the shipment must sign by hand the manifest. After you deliver the shipment, keep your copy of the manifest. Each copy must have all needed signatures and dates, including those of the person to whom you delivered the waste.

9.3.10 – Placarding

Attach the appropriate placards to the vehicle before you drive it. You are only allowed to move an improperly placarded vehicle during an emergency, in order to protect life or property.

- Placards must appear on both sides and both ends of the vehicle. Each placard must be:
- Easily seen from the direction it faces.
- Placed so the words or numbers are level and read from left to right.
- At least three inches away from any other markings.
- Kept clear of attachments or devices such as ladders, doors, and tarpaulins.
- Kept clean and undamaged so that the color, format, and message are easily seen.
- Be affixed to a background of contrasting color.
- The use of "Drive Safely" and other slogans is prohibited.
- The front placard may be on the front of the tractor or the front of the trailer.

To decide which placards to use, you need to know:

- The hazard class of the materials.
- The amount of hazardous materials shipped.
- The total weight of all classes of hazardous materials in your vehicle.

9.3.11 – Placard Tables

There are two placard tables, Table 1 and Table 2. Table 1 materials must be placarded whenever any amount is transported. See Figure 9.7.

Except for bulk packaging, the hazard classes in Table 2 need placards only if the total amount transported is 1,001 pounds or more including the package. Add the amounts from all shipping papers for all the Table 2 products you have on board. See Figure 9.8.

Placard Table 1 Any Amount	
IF YOUR VEHICLE CONTAINS ANY AMOUNT OF……	PLACARD AS…
1.1 Mass Explosives	Explosives 1.1
1.2 Project Hazards	Explosives 1.2
1.3 Mass Fire Hazards	Explosives 1.3
2.3 Poisonous/Toxic Gases	Poison Gas
4.3 Dangerous When Wet	Dangerous When Wet
5.2 (Organic Peroxide, Type B, liquid or solid, Temperature controlled)	Organic Peroxide
6.1 (Inhalation hazard zone A & B only)	Poison/toxic inhalation
7 (Radioactive Yellow III label only)	Radioactive

Figure 9.7

You may use DANGEROUS placards instead of separate placards for each Table 2 hazard class when:

- You have 1,001 pounds or more of two or more Table 2 hazard classes, requiring different placards, and
- You have not loaded 2,205 pounds or more of any Table 2 hazard class material at any one place. (You must use the specific placard for this material.)
- The dangerous placard is an option, not a requirement. You can always placard for the materials.

If the words INHALATION HAZARD are on the shipping paper or package, you must display POISON GAS or POISON INHALATION placards in addition to any other placards needed by the product's hazard class. The 1,000 pound exception does not apply to these materials.

Materials with a secondary hazard of dangerous when wet must display the DANGEROUS WHEN WET placard in addition to any other placards needed by the product's hazard class. The 1,000-pound exception to placarding does not apply to these materials.

Placard Table 2 1,001 Pounds Or More	
Category of Material (Hazard class or division number and additional description, as appropriate)	Placard Name
1.4 Minor Explosion	Explosives 1.4
1.5 Very Insensitive	Explosives 1.5
1.6 Extremely Insensitive	Explosives 1.6
2.1 Flammable Gases	Flammable Gas
2.2 Non- Flammable Gases	Non-Flammable Gas.
3 Flammable Liquids	Flammable
Combustible Liquid	Combustible*
4.1 Flammable Solids	Flammable Solid
4.2 Spontaneously Combustible	Spontaneously Combustible
5.1 Oxidizers	Oxidizer
5.2 (other than organic peroxide, Type B, liquid or solid, Temperature Controlled)	Organic Peroxide
6.1 (other than inhalation hazard zone A or B)	Poison
6.2 Infectious Substances	(None)
8 Corrosives	Corrosive
9 Miscellaneous Hazardous Materials	Class 9**
ORM-D	(None)
* FLAMMABLE may be used in place of a COMBUSTIBLE on a cargo tank or portable tank.	
** Class 9 Placard is not required for domestic transportation.	

Figure 9.8

Placards used to identify the primary or subsidiary hazard class of a material must have the hazard class or division number displayed in the lower corner of the placard. Permanently affixed subsidiary hazard placards without the hazard class number may be used as long as they stay within color specifications.

Placards may be displayed for hazardous materials even if not required so long as the placard identifies the hazard of the material being transported.

Bulk packaging is a single container with a capacity greater than 119 gallons. A bulk package, and a vehicle transporting a bulk package, must be placarded, even if it only has the residue of a hazardous material. Certain bulk packages only have to be placarded on the two opposite sides or may display labels. All other bulk packages must be placarded on all four sides.

Subsections 9.1, 9.2, and 9.3
Test Your Knowledge

1. Shippers package in order to (fill in the blank) the material.
2. Driver placard their vehicle to (fill in the blank) the risk.
3. What three things do you need to know to decide which placards (if any) you need?
4. A hazardous materials identification number must appear on the (fill in the blank) and on the (fill in the blank). The identification number must also appear on cargo tanks and other bulk packaging.
5. Where must you keep shipping papers describing hazardous materials?

These questions may be on your test. If you can't answer them all, re-read subsections 9.1, 9.2 and 9.3.

9.4 – Loading and Unloading

Do all you can to protect containers of hazardous materials. Don't use any tools, which might damage containers or other packaging during loading. Don't use hooks.

9.4.1 – General Loading Requirements

Before loading or unloading, set the parking brake. Make sure the vehicle will not move.

Many products become more hazardous when exposed to heat. Load hazardous materials away from heat sources.

Watch for signs of leaking or damaged containers: LEAKS SPELL TROUBLE! Do not transport leaking packages. Depending on the material, you, your truck, and others could be in danger. It is illegal to move a vehicle with leaking hazardous materials.

Containers of hazardous materials must be braced to prevent movement of the packages during transportation.

No Smoking. When loading or unloading hazardous materials, keep fire away. Don't let people smoke nearby. Never smoke around:

- Class 1 (Explosives)
- Class 2.1 (Flammable Gas)
- Class 3 (Flammable Liquids)
- Class 4 (Flammable Solids)
- Class 5 (Oxidizers)

Secure Against Movement. Brace containers so they will not fall, slide, or bounce around during transportation. Be very careful when loading containers that have valves or other fittings. All hazardous materials packages must be secured during transportation.

After loading, do not open any package during your trip. Never transfer hazardous materials from one package to another while in transit. You may empty a cargo tank, but do not empty any other package while it is on the vehicle.

Cargo Heater Rules. There are special cargo heater rules for loading:

- Class 1 (Explosives)
- Class 2.1 (Flammable Gas)
- Class 3 (Flammable Liquids)

The rules usually forbid use of cargo heaters, including automatic cargo heater/air conditioner units. Unless you have read all the related rules, don't load the above products in a cargo space that has a heater.

Use Closed Cargo Space. You cannot have overhang or tailgate loads of:

- Class 1 (Explosives)
- Class 4 (Flammable Solids)
- Class 5 (Oxidizers)

You must load these hazardous materials into a closed cargo space unless all packages are:

- Fire and water resistant.
- Covered with a fire and water resistant tarp.

Precautions for Specific Hazards

Class 1 (Explosives) Materials. Turn your engine off before loading or unloading any explosives. Then check the cargo space. You must:

- Disable cargo heaters. Disconnect heater power sources and drain heater fuel tanks.

Make sure there are no sharp points that might damage cargo. Look for bolts, screws, nails, broken side panels, and broken floorboards.

Use a floor lining with Division 1.1, 1.2, or 1.3. The floors must be tight and the liner must be either non-metallic material or non-ferrous metal. (Non-ferrous metals are any metal that does not contain iron or iron alloys).

Use extra care to protect explosives. Never use hooks or other metal tools. Never drop, throw, or roll packages. Protect explosive packages from other cargo that might cause damage.

Do not transfer a Division 1.1, 1.2, or 1.3 from one vehicle to another on a public roadway except in an emergency. If safety requires an emergency transfer, set out red warning reflectors, flags, or electric lanterns. You must warn others on the road.

Never transport damaged packages of explosives. Do not take a package that shows any dampness or oily stain.

Do not transport Division 1.1 or 1.2 in vehicle combinations if:

- There is a marked or placarded cargo tank in the combination.

The other vehicle in the combination contains:

- ➢ Division 1.1 A (Initiating Explosives).
- ➢ Packages of Class 7 (Radioactive) materials labeled "Yellow III."
- ➢ Division 2.3 (Poisonous Gas) Hazard zone A or B or Division 6.1 (Poisonous) materials Hazard zone A.
- ➢ Hazardous materials in a portable tank, on a DOT Spec 106A or 110A tank.

Class 4 (Flammable Solids) and Class 5 (Oxidizers) Materials. Class 4 materials are solids that react (including fire and explosion) to water, heat, and air or even react spontaneously.

Class 4 and 5 materials must be completely enclosed in a vehicle or covered securely. Class 4 and 5 materials, which become unstable and dangerous when wet, must be kept dry while in transit and during loading and unloading. Materials that are subject to spontaneous combustion or heating must be in vehicles with sufficient ventilation.

Class 8 (Corrosive) Materials. If loading by hand, load breakable containers of corrosive liquid one by one. Keep them right side up. Do not drop or roll the containers. Load them onto an even floor surface. Stack carboys only if the lower tiers can bear the weight of the upper tiers safely.

Do not load nitric acid above any other product.

Load charged storage batteries so their liquid won't spill. Keep them right side up. Make sure other cargo won't fall against or short circuit them.

Never load corrosive liquids next to or above:

- Division 1.4 (Explosives C).
- Division 4.1 (Flammable Solids).
- Division 4.3 (Dangerous When Wet).
- Class 5 (Oxidizers).
- Division 2.3, Zone B (Poisonous Gases).

Never load corrosive liquids with:

- Division 1.1 or 1.2
- Division 1.3
- Division 1.5 (Blasting Agents).
- Division 2.3, Zone A (Poisonous Gases).
- Division 4.2 (Spontaneously Combustible Materials).
- Division 6.1, PGI, Zone A (Poison Liquids).

Class 2 (Compressed Gases) Including Cryogenic Liquids. If your vehicle doesn't have racks to hold cylinders, the cargo space floor must be flat. The cylinders must be:

- Held upright.
- In racks attached to the vehicle or in boxes that will keep them from turning over.

Cylinders may be loaded in a horizontal position (lying down) if it is designed so the relief valve is in the vapor space.

Division 2.3 (Poisonous Gas) or Division 6.1 (Poisonous) Materials. Never transport these materials in containers with interconnections. Never load a package labeled POISON or POISON INHALATION HAZARD in the driver's cab or sleeper or with food material for human or animal consumption. There are special rules for loading and unloading Class 2 materials in cargo tanks. You must have special training to do this.

Class 7 (Radioactive) Materials. Some packages of Class 7 (Radioactive) materials bear a number called the "transport index." The shipper labels these packages Radioactive II or Radioactive III, and prints the package's transport index on the label. Radiation surrounds each package, passing through all nearby packages. To deal with this problem, the number of packages you can load together is controlled. Their closeness to people, animals, and unexposed film is also controlled. The transport index tells the degree of control needed during transportation. The total transport index of all packages in a single vehicle must not exceed 50.Table A to this section (49 CFR 177-842) shows rules for each transport index. It shows how close you can load Class 7 (Radioactive) materials to people, animals, or film. For example, you can't leave a package with a transport index of 1.1 within two feet of people or cargo space walls.

Do Not Load Table	
Do Not Load	**In The Same Vehicle With**
Division 6.1 or 2.3 (POISON or poison inhalation hazard labeled material).	Animal or human food unless the poison package is over packed in an approved way. Foodstuffs are anything you swallow. However, mouthwash, toothpaste, and skin creams are not foodstuff.
Division 2.3 (Poisonous) gas Zone A or Division 6.1 (Poison) liquids, PGI, Zone A.	Division 1.1, 1.2, 1.3 Explosives, Division 5.1 (Oxidizers), Class 3 (Flammable Liquids), Class 8 (Corrosive Liquids), Division 5.2 (Organic Peroxides), Division 1.1, 1.2, 1.3 Explosives, Division 1.5 (Blasting Agents), Division 2.1 (Flammable Gases), Class 4 (Flammable Solids).
Charged storage batteries.	Division 1.1.
Class 1 (Detonating primers).	Any other explosives unless in authorized containers or packages.
Division 6.1 (Cyanides or cyanide mixtures).	Acids, corrosive materials, or other acidic materials which could release hydrocyanic acid. For Example: Cyanides, Inorganic, n.o.s. Silver Cyanide Sodium Cyanide.
Nitric acid (Class 8).	Other materials unless the nitric acid is not loaded above any other material.

Figure 9.9

Mixed loads. The rules require some products to be loaded separately. You cannot load them together in the same cargo space. Figure 9.9 lists some examples. The regulations (the Segregation Table for Hazardous Materials) name other materials you must keep apart.

Subsection 9.4
Test Your Knowledge

1. Around which hazard classes must you never smoke?
2. Which three hazard classes should not be loaded into a trailer that has a heater/air conditioner unit?
3. Should the floor liner required for Division 1.1 or 1.2 materials be stainless steel?
4. At the shipper's dock you're given a paper for 100 cartons of battery acid. You already have 100 pounds of dry Silver Cyanide on board. What precautions do you have to take?
5. Name a hazard class that uses transport indexes to determine the amount that can be loaded in a single vehicle.

These questions may be on your test. If you can't answer them all, re-read subsection 9.4.

9.5 – Bulk Packaging Marking, Loading and Unloading

The glossary at the end of this section gives the meaning of the word bulk. Cargo tanks are bulk packaging permanently attached to a vehicle. Cargo tanks remain on the vehicle when you load and unload them. Portable tanks are bulk packaging, which are not permanently attached to a vehicle. The product is loaded or unloaded while the portable tanks are off the vehicle. Portable tanks are then put on a vehicle for transportation. There are many types of cargo tanks in use. The most common cargo tanks are MC306 for liquids and MC331 for gases.

9.5.1 – Markings

You must display the identification number of the hazardous materials in portable tanks and cargo tanks and other bulk packaging (such as dump trucks). Identification numbers are in column 4 of the Hazardous Materials Table. The rules require black 100 mm (3.9 inch) numbers on orange panels, placards, or a white, diamond-shaped background if no placards are required. Specification cargo tanks must show re-test date markings.

Portable tanks must also show the lessee or owner's name. They must also display the shipping name of the contents on two opposing sides. The letters of the shipping name must be at least two inches tall on portable tanks with capacities of more than 1,000 gallons and one-inch tall on portable tanks with capacities of less than 1,000 gallons. The identification number must appear on each side and each end of a portable tank or other bulk packaging that hold 1,000 gallons or more and on two opposing sides, if the portable tank holds less than 1,000 gallons. The identification numbers must still be visible when the portable tank is on the motor vehicle. If they are not visible, you must display the identification number on both sides and ends of the motor vehicle.

Intermediate bulk containers (IBCs) are bulk packages, but are not required to have the owner's name or shipping name.

9.5.2 – Tank Loading

The person in charge of loading and unloading a cargo tank must be sure a qualified person is always watching. This person watching the loading or unloading must:

- Be alert.
- Have a clear view of the cargo tank.
- Be within 25 feet of the tank.

- Know of the hazards of the materials involved.
- Know the procedures to follow in an emergency.
- Be authorized to move the cargo tank and able to do so.

There are special attendance rules for cargo tanks transporting propane and anhydrous ammonia.

Close all manholes and valves before moving a tank of hazardous materials, no matter how small the amount in the tank or how short the distance. Manholes and valves must be closed to prevent leaks. It is illegal to move a cargo tank with open valves or covers unless it is empty according to 49 CFR 173.29.

9.5.3 – Flammable Liquids

Turn off your engine before loading or unloading any flammable liquids. Only run the engine if needed to operate a pump. Ground a cargo tank correctly before filling it through an open filling hole. Ground the tank before opening the filling hole, and maintain the ground until after closing the filling hole.

9.5.4 – Compressed Gas

Keep liquid discharge valves on a compressed gas tank closed except when loading and unloading. Unless your engine runs a pump for product transfer, turn it off when loading or unloading. If you use the engine, turn it off after product transfer, before you unhook the hose. Unhook all loading/unloading connections before coupling, uncoupling, or moving a cargo tank. Always chock trailers and semi-trailers to prevent motion when uncoupled from the power unit.

Subsection 9.5
Test Your Knowledge

1. What are cargo tanks?
2. How is a portable tank different from a cargo tank?
3. Your engine runs a pump used during delivery of compressed gas. Should you turn off the engine before or after unhooking hoses after delivery?

These questions may be on your test. If you can't answer them all, re-read subsection 9.5.

9.6 – Hazardous Materials -- Driving and Parking Rules

9.6.1 – Parking with Division 1.1, 1.2, or 1.3 Explosives

Never park with Division 1.1, 1.2, or 1.3 explosives within five feet of the traveled part of the road. Except for short periods of time needed for vehicle operation necessities (e.g., fueling), do not park within 300 feet of:

- A bridge, tunnel, or building.
- A place where people gather.
- An open fire.

If you must park to do your job, do so only briefly.

Don't park on private property unless the owner is aware of the danger. Someone must always watch the parked vehicle. You may let someone else watch it for you only if your vehicle is:

- On the shipper's property.
- On the carrier's property.
- On the consignee's property.

You are allowed to leave your vehicle unattended in a safe haven. A safe haven is an approved place for parking unattended vehicles loaded with explosives. Designation of authorized safe havens is usually made by local authorities.

9.6.2 – Parking a Placarded Vehicle Not Transporting Division 1.1, 1.2, or 1.3) Explosives

You may park a placarded vehicle (not laden with explosives) within five feet of the traveled part of the road only if your work requires it. Do so only briefly. Someone must always watch the vehicle when parked on a public roadway or shoulder. Do not uncouple a trailer and leave it with hazardous materials on a public street. Do not park within 300 feet of an open fire.

9.6.3 – Attending Parked Vehicles

The person attending a placarded vehicle must:

- Be in the vehicle, awake, and not in the sleeper berth, or within 100 feet of the vehicle and have it within clear view.
- Be aware of the hazards of the materials being transported.
- Know what to do in emergencies.
- Be able to move the vehicle, if needed.

9.6.4 – No Flares!

You might break down and have to use stopped vehicle signals. Use reflective triangles or red electric lights. Never use burning signals, such as flares or fuses, around a:

- Tank used for Class 3 (Flammable Liquids) or Division 2.1 (Flammable Gas) whether loaded or empty.
- Vehicle loaded with Division 1.1, 1.2, or 1.3 Explosives.

9.6.5 – Route Restrictions

Some states and counties require permits to transport hazardous materials or wastes. They may limit the routes you can use. Local rules about routes and permits change often. It is your job as driver to find out if you need permits or must use special routes. Make sure you have all needed papers before starting.

If you work for a carrier, ask your dispatcher about route restrictions or permits. If you are an independent trucker and are planning a new route, check with state agencies where you plan to travel. Some localities prohibit transportation of hazardous materials through tunnels, over bridges, or other roadways. Always check before you start.

Whenever placarded, avoid heavily populated areas, crowds, tunnels, narrow streets, and alleys. Take other routes, even if inconvenient, unless there is no other way. Never drive a placarded vehicle near open fires unless you can safely pass without stopping.

If transporting Division 1.1, 1.2, or 1.3 explosives, you must have a written route plan and follow that plan. Carriers prepare the route plan in advance and give the driver a copy. You may plan the route yourself if you pick up the explosives at a location other than your employer's terminal. Write out the plan in advance. Keep a copy of it with you while transporting the explosives. Deliver shipments of explosives only to authorized persons or leave them in locked rooms designed for explosives storage.

A carrier must choose the safest route to transport placarded radioactive materials. After choosing the route, the carrier must tell the driver about the radioactive materials, and show the route plan.

9.6.6 – No Smoking

Do not smoke within 25 feet of a placarded cargo tank used for Class 3 (flammable liquids) or Division 2.1 (gases). Also, do not smoke or carry a lighted cigarette, cigar, or pipe within 25 feet of any vehicle, which contains:

- Class 1 (Explosives)
- Class 3 (Flammable Liquids)
- Class 4.1 (Flammable Solids)
- Class 4.2 (Spontaneously Combustible)
- Class 5 (Oxidizers)

9.6.7 – Refuel with Engine Off

Turn off your engine before fueling a motor vehicle containing hazardous materials. Someone must always be at the nozzle, controlling fuel flow.

9.6.8 – 10 B C Fire Extinguisher

The power unit of placarded vehicles must have a fire extinguisher with a UL rating of 10 B:C or more.

9.6.9 – Check Tires

Make sure your tires are properly inflated.

You must examine each tire on a motor vehicle at the beginning of each trip and each time the vehicle is parked.

The only acceptable way to check tire pressure is to use a tire pressure gauge.

Do not drive with a tire that is leaking or flat except to the nearest safe place to fix it. Remove any overheated tire. Place it a safe distance from your vehicle. Don't drive until you correct the cause of the overheating. Remember to follow the rules about parking and attending placarded vehicles. They apply even when checking, repairing, or replacing tires.

9.6.10 – Where to Keep Shipping Papers and Emergency Response Information

Do not accept a hazardous materials shipment without a properly prepared shipping paper. A shipping paper for hazardous materials must always be easily recognized. Other people must be able to find it quickly after a crash.

- Clearly distinguish hazardous materials shipping papers from others by tabbing them or keeping them on top of the stack of papers.

- When you are behind the wheel, keep shipping papers within your reach (with your seat belt on), or in a pouch on the driver's door. They must be easily seen by someone entering the cab.
- When not behind the wheel, leave shipping papers in the driver's door pouch or on the driver's seat.
- Emergency response information must be kept in the same location as the shipping paper.
- Papers for Division 1.1, 1.2 or, 1.3 Explosives.

A carrier must give each driver transporting Division 1.1, 1.2, or 1.3 explosives a copy of Federal Motor Carrier Safety Regulations (FMCSR), Part 397. The carrier must also give written instructions on what to do if delayed or in an accident. The written instructions must include:

- The names and telephone numbers of people to contact (including carrier agents or shippers).
- The nature of the explosives transported.
- The precautions to take in emergencies such as fires, accidents, or leaks.
- Drivers must sign a receipt for these documents.

You must be familiar with, and have in your possession while driving, the:

- Shipping papers.
- Written emergency instructions.
- Written route plan.
- A copy of FMCSR, Part 397.

9.6.11 – Equipment for Chlorine

A driver transporting chlorine in cargo tanks must have an approved gas mask in the vehicle. The driver must also have an emergency kit for controlling leaks in dome cover plate fittings on the cargo tank.

9.6.12 – Stop before Railroad Crossings

Stop before a railroad crossing if your vehicle:

- Is placarded.
- Carries any amount of chlorine.
- Has cargo tanks, whether loaded or empty used for hazardous materials.

You must stop 15 to 50 feet before the nearest rail. Proceed only when you are sure no train is coming and you can clear the tracks without stopping. Don't shift gears while crossing the tracks.

9.7 – Hazardous Materials Emergencies

9.7.1 – Emergency Response Guidebook (ERG)

The Department of Transportation has a guidebook for firefighters, police, and industry workers on how to protect themselves and the public from hazardous materials. The guide is indexed by proper shipping name and hazardous materials identification number. Emergency personnel look for these things on the shipping paper. That is why it is vital that the proper shipping name, identification number, label, and placards are correct.

9.7.2 – Crashes/Incidents

As a professional driver, your job at the scene of a crash or an incident is to:

- Keep people away from the scene.
- Limit the spread of material, only if you can safely do so.
- Communicate the danger of the hazardous materials to emergency response personnel.
- Provide emergency responders with the shipping papers and emergency response information.

Follow this checklist:

- Check to see that your driving partner is OK.
- Keep shipping papers with you.
- Keep people far away and upwind.
- Warn others of the danger.
- Call for help.
- Follow your employer's instructions.

9.7.3 – Fires

You might have to control minor truck fires on the road. However, unless you have the training and equipment to do so safely, don't fight hazardous materials fires. Dealing with hazardous materials fires requires special training and protective gear.

When you discover a fire, call for help. You may use the fire extinguisher to keep minor truck fires from spreading to cargo before firefighters arrive. Feel trailer doors to see if they are hot before opening them. If hot, you may have a cargo fire and should not open the doors. Opening doors lets air in and may make the fire flare up. Without air, many fires only smolder until firemen arrive, doing less damage. If your cargo is already on fire, it is not safe to fight the fire. Keep the shipping papers with you to give to emergency personnel as soon as they arrive. Warn other people of the danger and keep them away.

If you discover a cargo leak, identify the hazardous materials leaking by using shipping papers, labels, or package location. Do not touch any leaking material--many people injure themselves by touching hazardous materials. Do not try to identify the material or find the source of a leak by smell. Toxic gases can destroy your sense of smell and can injure or kill you even if they don't smell. Never eat, drink, or smoke around a leak or spill.

If hazardous materials are spilling from your vehicle, do not move it any more than safety requires. You may move off the road and away from places where people gather, if doing so serves safety. Only move your vehicle if you can do so without danger to yourself or others.

Never continue driving with hazardous materials leaking from your vehicle in order to find a phone , truck stop, help, or similar reason. Remember, the carrier pays for the cleanup of contaminated parking lots, roadways, and drainage ditches. The costs are enormous, so don't leave a lengthy trail of contamination. If hazardous materials are spilling from your vehicle:

- Park it.
- Secure the area.
- Stay there.
- Call for help or send someone else for help.

When sending someone for help, give that person:

- A description of the emergency.
- Your exact location and direction of travel.
- Your name, the carrier's name, and the name of the community or city where your terminal is located.
- The proper shipping name, hazard class, and identification number of the hazardous materials, if you know them.

This is a lot for someone to remember. It is a good idea to write it all down for the person you send for help. The emergency response team must know these things to find you and to handle the emergency. They may have to travel miles to get to you. This information will help them to bring the right equipment the first time, without having to go back for it.

Never move your vehicle, if doing so will cause contamination or damage the vehicle. Keep upwind and away from roadside rests, truck stops, cafes, and businesses. Never try to repack leaking containers. Unless you have the training and equipment to repair leaks safely, don't try it. Call your dispatcher or supervisor for instructions and, if needed, emergency personnel.

9.7.4 – Responses to Specific Hazards

Class 1 (Explosives). If your vehicle has a breakdown or accident while carrying explosives, warn others of the danger. Keep bystanders away. Do not allow smoking or open fire near the vehicle. If there is a fire, warn every one of the danger of explosion.

Remove all explosives before separating vehicles involved in a collision. Place the explosives at least 200 feet from the vehicles and occupied buildings. Stay a safe distance away.

Class 2 (Compressed Gases). If compressed gas is leaking from your vehicle, warn others of the danger. Only permit those involved in removing the hazard or wreckage to get close. You must notify the shipper if compressed gas is involved in any accident.

Unless you are fueling machinery used in road construction or maintenance, do not transfer a flammable compressed gas from one tank to another on any public roadway.

Class 3 (Flammable Liquids). If you are transporting a flammable liquid and have an accident or your vehicle breaks down, prevent bystanders from gathering. Warn people of the danger. Keep them from smoking.

Never transport a leaking cargo tank farther than needed to reach a safe place. Get off the roadway if you can do so safely. Don't transfer flammable liquid from one vehicle to another on a public roadway except in an emergency.

Class 4 (Flammable Solids) and Class 5 (Oxidizing Materials). If a flammable solid or oxidizing material spills, warn others of the fire hazard. Do not open smoldering packages of flammable solids. Remove them from the vehicle if you can safely do so. Also, remove unbroken packages if it will decrease the fire hazard.

Class 6 (Poisonous Materials and Infectious Substances). It is your job to protect yourself, other people, and property from harm. Remember that many products classed as poison are also flammable. If you think a Division 2.3 (Poison Gases) or Division 6.1 (Poison Materials) might be flammable, take the added precautions needed for flammable liquids or gases. Do not allow smoking, open flame, or welding. Warn others of the hazards of fire, of inhaling vapors, or coming in contact with the poison.

A vehicle involved in a leak of Division 2.3 (Poison Gases) or Division 6.1 (Poisons) must be checked for stray poison before being used again.

If a Division 6.2 (Infectious Substances) package is damaged in handling or transportation, you should immediately contact your supervisor. Packages that appear to be damaged or show signs of leakage should not be accepted.

Class 7 (Radioactive Materials). If radioactive material is involved in a leak or broken package, tell your dispatcher or supervisor as soon as possible. If there is a spill, or if an internal container might be damaged, do not touch or inhale the material. Do not use the vehicle until it is cleaned and checked with a survey meter.

Class 8 (Corrosive Materials). If corrosives spill or leak during transportation, be careful to avoid further damage or injury when handling the containers. Parts of the vehicle exposed to a corrosive liquid must be thoroughly washed with water. After unloading, wash out the interior as soon as possible before reloading.

If continuing to transport a leaking tank would be unsafe, get off the road. If safe to do so, contain any liquid leaking from the vehicle. Keep bystanders away from the liquid and its fumes. Do everything possible to prevent injury to yourself and to others.

9.7.5 – Required Notification

The National Response Center helps coordinate emergency response to chemical hazards. It is a resource to the police and firefighters. It maintains a 24-hour toll-free line listed below. You or your employer must phone when any of the following occur as a direct result of a hazardous materials incident:

- A person is killed.
- An injured person requires hospitalization.
- Estimated property damage exceeds $50,000.
- The general public is evacuated for more than one hour.
- One or more major transportation arteries or facilities are closed for one hour or more.
- Fire, breakage, spillage, or suspected radioactive contamination occurs.
- Fire, breakage, spillage or suspected contamination occur involving shipment of infectious substance(s) (bacteria or toxins).
- The release of a marine pollutant in a quantity greater than 119 gallons for a liquid or 882 pounds for a solid; or a situation exists of such a nature (e.g., continuing danger to life exists at the scene of an incident) that, in the judgment of the carrier, should be reported.

National Response Center
(800) 424-8802

Persons telephoning the National Response Center should be ready to give:

- Their name.
- Name and address of the carrier they work for.
- Phone number where they can be reached.
- Date, time, and location of incident.
- The extent of injuries, if any.
- Classification, name, and quantity of hazardous materials • involved, if such information is available.
- Type of incident and nature of hazardous materials involvement and whether a continuing danger to life exists at the scene.

If a reportable quantity of hazardous substance was involved, the caller should give the name of the shipper and the quantity of the hazardous substance discharged.

Be prepared to give your employer the required information as well. Carriers must make detailed written reports within 30 days of an incident.

CHEMTREC
(800) 424-9300

The Chemical Transportation Emergency Center (CHEMTREC) in Washington also has a 24-hour toll-free line. CHEMTREC was created to provide emergency personnel with technical information about the physical properties of hazardous materials. The National Response Center and CHEMTREC are in close communication. If you call either one, they will tell the other about the problem when appropriate.

Do not leave radioactive yellow - II or yellow - III labeled packages near people, animals, or film longer than shown in Figure 9.10

Radioactive Separation Table A						
TOTAL TRANSPORT INDEX	MINIMUM DISTANCE IN FEET TO NEAREST UNDEVELOPED FILM					TO PEOPLE OR CARGO COMPARTMENT PARTITIONS
	0-2 Hrs.	2-4 Hrs.	4-8 Hrs.	8-12 Hrs.	Over 12 Hrs.	
None	0	0	0	0	0	0
0.1 to 1.0	1	2	3	4	5	1
1.1 to 5.0	3	4	6	8	11	2
5.1 to 10.0	4	6	9	11	15	3
10.1 to 20.0	5	8	12	16	22	4
20.1 to 30.0	7	10	15	20	29	5
30.1 to 40.0	8	11	17	22	33	6
40.1 to 50.0	9	12	19	24	36	

Figure 9.10

Classes of Hazardous Materials

Hazardous materials are categorized into nine major hazard classes and additional categories for consumer commodities and combustible liquids. The classes of hazardous materials are listed in Figure 9.11.

Hazard Class Definitions Table B		
Class	**Class Name**	**Example**
1	Explosives	Ammunition, Dynamite, Fireworks
2	Gases	Propane, Oxygen, Helium
3	Flammable	Gasoline, Acetone
4	Flammable Solids	Matches, Fuses
5	Oxidizers	Ammonium Nitrate, Hydrogen Peroxide
6	Poisons	Pesticides, Arsenic
7	Radioactive	Uranium, Plutonium
8	Corrosives	Hydrochloric Acid, Battery Fluid
9	Miscellaneous Hazardous Materials	Formaldehyde, Asbestos
None	ORM-D (Other Regulated Material-Domestic)	Hair Spray or Charcoal
None	Combustible Liquids	Fuel Oils, Lighter Fluid

Figure 9.11

Subsections 9.6 and 9.7
Test Your Knowledge

1. If your placarded trailer has dual tires, how often should you check the tires?
2. What is a safe haven?
3. How close to the traveled part of the roadway can you park with Division 1.2 or 1.3 materials?
4. How close can you park to a bridge, tunnel, or building with the same load?
5. What type of fire extinguisher must placarded vehicles carry?
6. You're hauling 100 pounds of Division 4.3 (dangerous when wet) materials. Do you need to stop before a railroad-highway crossing?
7. At a rest area you discover your hazardous materials shipments slowly leaking from the vehicle. There is no phone around. What should you do?
8. What is the Emergency Response Guide (ERG)?

These questions may be on your test. If you can't answer them all, re-read subsections 9.6 and 9.7.

9.8 – Hazardous Materials Glossary

This glossary presents definitions of certain terms used in this section. A complete glossary of terms can be found in the federal Hazardous Materials Rules (49 CFR 171.8). You should have an up-to-date copy of these rules for your reference.

(Note: You will not be tested on this glossary.)

Sec. 171.8 Definitions and abbreviations.

Bulk packaging – Packaging, other than a vessel, or a barge, including a transport vehicle or freight container, in which hazardous materials are loaded with no intermediate form of containment and which has:

1. A maximum capacity greater than 450 L (119 gallons) as a receptacle for a liquid;
2. A maximum net mass greater than 400 kg (882 pounds) or a maximum capacity greater than 450 L (119 gallons) as a receptacle for a solid; or
3. A water capacity greater than 454 kg (1000 pounds) as a receptacle for a gas as defined in Sec. 173.115.

Cargo tank - A bulk packaging which:

1. Is a tank intended primarily for the carriage of liquids or gases and includes appurtenances, reinforcements, fittings, and closures (for "tank", see 49 CFR 178.3451(c), 178.3371, or 178.3381, as applicable);
2. Is permanently attached to or forms a part of a motor vehicle, or is not permanently attached to a motor vehicle but which, by reason of its size, construction, or attachment to a motor vehicle is loaded or unloaded without being removed from the motor vehicle; and
3. Is not fabricated under a specification for cylinders, portable tanks, tank cars, or multiunit tank car tanks.

Carrier – A person who transports passengers or property in commerce by rail car, aircraft, motor vehicle or vessel.

Consignee – The business or person to whom a shipment is delivered.

Division – A subdivision of a hazard class.

EPA – U.S. Environmental Protection Agency.

FMCSR – The Federal Motor Carrier Safety Regulations.

Freight container – a reusable container having a volume of 64 cubic feet or more, designed and constructed to permit being lifted with its contents intact and intended primarily for containment of packages (in unit form) during transportation.

Fuel tank – A tank, other than a cargo tank, used to transport flammable or combustible liquid or compressed gas for the purpose of supplying fuel for propulsion of the transport vehicle to which it is attached, or for the operation of other equipment on the transport vehicle.

Gross weight or gross mass – The weight of the packaging plus the weight of its contents.

Hazard class – The category of hazard assigned to a hazardous material under the definitional criteria of Part 173 and the provisions of the Sec. 172.101 Table. A material may meet the defining criteria for more than one hazard class but is assigned to only one hazard class.

Hazardous materials – A substance or material which has been determined by the Secretary of Transportation to be capable of posing an unreasonable risk to health, safety, and property when transported in commerce, and which has been so designated. The term includes hazardous substances, hazardous wastes, marine pollutants, elevated temperature materials and materials designated as hazardous in the hazardous materials table of §172.101, and materials that meet the defining criteria for hazard classes and divisions in §173, subchapter c of this chapter.

Hazardous substance - A material, including its mixtures and solutions, that:

1. Is listed in Appendix A to Sec. 172.101;
2. Is in a quantity, in one package, which equals or exceeds the reportable quantity (RQ) listed in Appendix A to Sec. 172.101; and
3. When in a mixture or solution
   (i) For radionuclides, conforms to paragraph 7 of Appendix A to Sec. 172.101.
   (ii) For other than radionuclides, is in a concentration by weight which equals or exceeds the concentration corresponding to the RQ of the material, as shown in Figure 9.12.

Hazardous Substance Concentrations		
RQ Pounds (Kilograms	Concentration by Weight	
	Percent	PPM
5,000 (2,270)	10	100,000
1,000 (454)	2	20,000
100 (45.4)	.2	2,000
10 (4.54)	.02	200
1 (0.454)	.002	20

Figure 9.12

This definition does not apply to petroleum products that are lubricants or fuels (see 40 CFR 300.6).

Hazardous waste – Any material that is subject to the Hazardous Waste Manifest Requirements of the U.S. Environmental Protection Agency specified in 40 CFR Part 262.

Intermediate bulk container (IBC) – A rigid or flexible portable packaging, other than a cylinder or portable tank, which is designed for mechanical handling. Standards for IBCs manufactured in the United States are set forth in subparts N and O Part 178.

Limited quantity – The maximum amount of a hazardous material for which there may be specific labeling or packaging exception.

Marking – The descriptive name, identification number, instructions, cautions, weight, specification, or UN marks or combinations thereof, required by this subchapter on outer packaging of hazardous materials.

Mixture – A material composed of more than one chemical compound or element.

Name of contents – The proper shipping name as specified in Sec. 172.101.

Non-bulk packaging - A packaging, which has:

1. A maximum capacity of 450 L (119 gallons) as a receptacle for a liquid;
2. A maximum net mass less than 400 kg (882 pounds) and a maximum capacity of 450 L (119 gallons) or less as a receptacle for a solid;
3. A water capacity greater than 454 kg (1,000 pounds) or less as a receptacle for a gas as defined in Sec. 173.115;

Regardless of the definition of bulk packaging, a mazimum net mass of 400 kg (882 pounds) or less for a bag or box conforming to the applicable requirements for specification packagings, including the maximum net mass limitations, provided in subpart L of Part 178.

N.O.S. - Not otherwise specified.

Outage or ullage – The amount by which a packaging falls short of being liquid full, usually expressed in percent by volume.

Portable tank – Bulk packaging (except a cylinder having a water capacity of 1,000 pounds or less) designed primarily to be loaded onto, or on, or temporarily attached to a transport vehicle or ship and equipped with skids, mountings, or accessories to facilitate handling of the tank by mechanical means. It does not include a cargo tank, tank car, multi unit tank car tank, or trailer carrying 3AX, 3AAX, or 3T cylinders.

Proper shipping name – The name of the hazardous materials shown in Roman print (not italics) in Sec. 172.101.

P.s.i. or psi – Pounds per square inch.

P.s.i.a. or psia – Pounds per square inch absolute.

Reportable quantity (RQ) - The quantity specified in Column 2 of the Appendix to Sec. 172.101 for any material identified in Column 1 of the Appendix.

RSPA – now PHMSA – The Pipeline and Hazardous Materials Safety Administration, U.S. Department of Transportation, Washington, DC 20590.

Shipper's certification – A statement on a shipping paper, signed by the shipper, saying he/she prepared the shipment properly according to law. For example:

"This is to certify that the above named materials are properly classified, described, packaged, marked and labeled, and are in proper condition for transportation according to the applicable regulations or the Department of Transportation."; or

*I hereby declare that the contents of this consignment are fully and accurately described above by the proper shipping name and are classified, packaged, marked and labeled/placarded, and are in all respects in proper condition for transport by * according to applicable international and national government regulations."*

** words may be inserted here to indicate mode of transportation (rail, aircraft, motor vehicle, vessel)*

Shipping paper – A shipping order, bill of lading, manifest, or other shipping document serving a similar purpose and containing the information required by Sec. 172.202, 172.203, and 172.204.

Technical name – A recognized chemical name or microbiological name currently used in scientific and technical handbooks, journals, and texts.

Transport vehicle – A cargo carrying vehicle such as an automobile, van, tractor, truck, semi-trailer, tank car, or rail car used for the transportation of cargo by any mode. Each cargo carrying body (trailer, rail car, etc.) is a separate transport vehicle.

UN standard packaging – A specification packaging conforming to the standards in the UN recommendations.

UN – United Nations.

Section 10
SCHOOL BUSES

This Section Covers

- **Danger Zones and Use of Mirrors**
- **Loading and Unloading**
- **Emergency Exit and Evacuation**
- **Railroad-highway Grade Crossings**
- **Student Management**
- **Antilock Braking Systems**
- **Special Safety Considerations**

Because state and local laws and regulations regulate so much of school transportation and school bus operations, many of the procedures in this section may differ from state to state. You should be thoroughly familiar with the laws and regulations in your state and local school district.

10.1 – Danger Zones and Use of Mirrors

10.1.1 – Danger Zones

The danger zone is the area on all sides of the bus where children are in the most danger of being hit, either by another vehicle or their own bus. The danger zones may extend as much as 30 feet from the front bumper with the first 10 feet being the most dangerous, 10 feet from the left and right sides of the bus and 10 feet behind the rear bumper of the school bus. In addition, the area to the left of the bus is always considered dangerous because of passing cars. Figure 10.1 illustrates these danger zones.

10.1.2 – Correct Mirror Adjustment

Proper adjustment and use of all mirrors is vital to the safe operation of the school bus in order to observe the danger zone around the bus and look for students, traffic, and other objects in this area. You should always check each mirror before operating the school bus to obtain maximum viewing area. If necessary, have the mirrors adjusted.

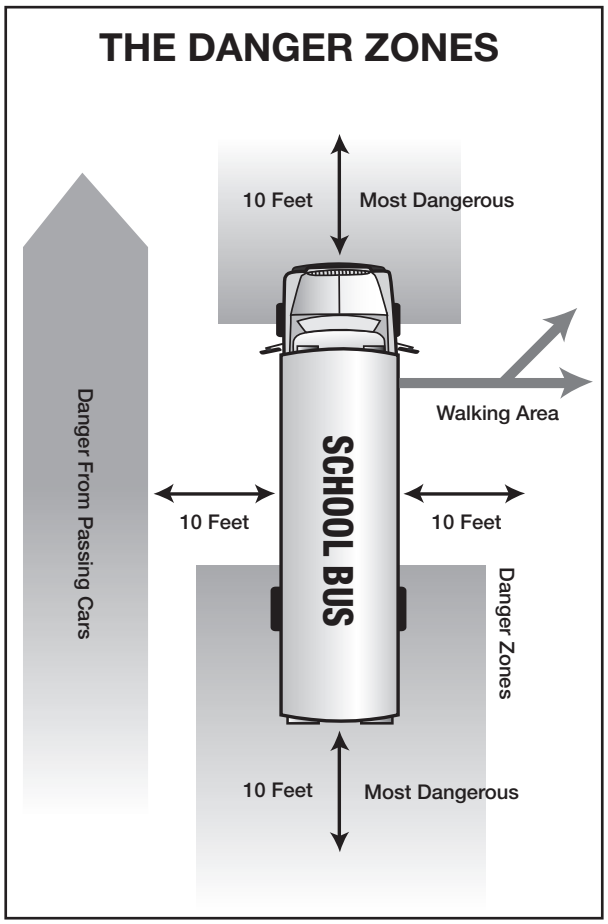

Figure 10.1

10.1.3 – Outside Left and Right Side Flat Mirrors

These mirrors are mounted at the left and right front corners of the bus at the side or front of the windshield. They are used to monitor traffic, check clearances and students on the sides and to the rear of the bus. There is a blind spot immediately below and in front of each mirror and directly in back of the rear bumper. The blind spot behind the bus extends 5o to 150 feet and could extend up to 400 feet depending on the length and width of the bus.

Ensure that the mirrors are properly adjusted so you can see:

- 200 feet or 4 bus lengths behind the bus.
- Along the sides of the bus.
- The rear tires touching the ground.

Figure 10.2 shows how both the outside left and right side flat mirrors should be adjusted.

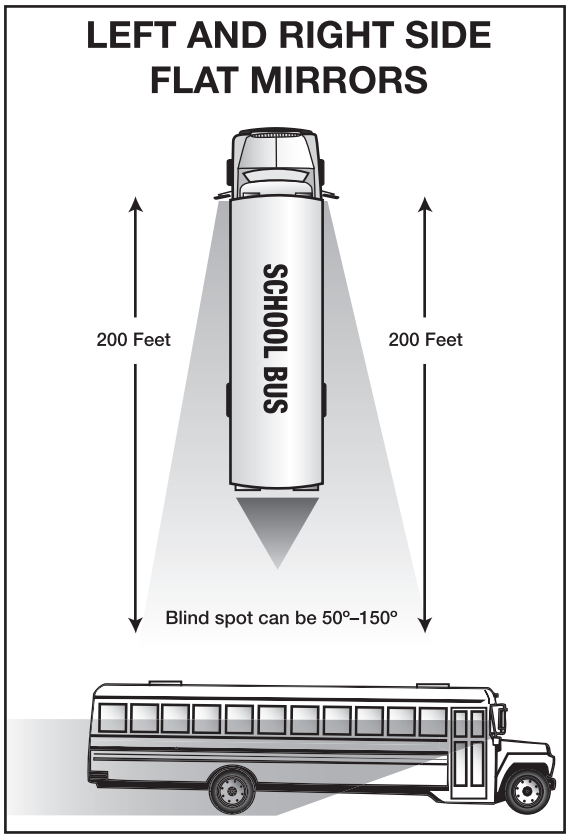

Figure 10.2

10.1.4 – Outside Left and Right Side Convex Mirrors

The convex mirrors are located below the outside flat mirrors. They are used to monitor the left and right sides at a wide angle. They provide a view of traffic, clearances, and students at the side of the bus. These mirrors present a view of people and objects that does not accurately reflect their size and distance from the bus.

You should position these mirrors to see:

- The entire side of the bus up to the mirror mounts.
- Front of the rear tires touching the ground.
- At least one traffic lane on either side of the bus.

Figure 10.3 shows how both the outside left and right side convex mirrors should be adjusted.

10.1.5 – Outside Left and Right Side Crossover Mirrors

These mirrors are mounted on both left and right front corners of the bus. They are used to see the front bumper "danger zone" area directly in front of the bus that is not visible by direct vision, and to view the "danger zone" area to the left side and the

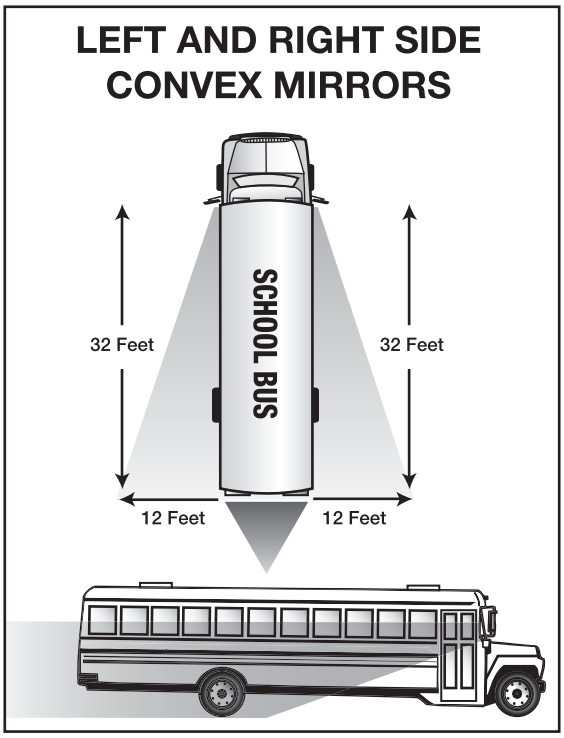

Figure 10.3

right side of the bus, including the service door and front wheel area. The mirror presents a view of people and objects that does not accurately reflect their size and distance from the bus. The driver must ensure that these mirrors are properly adjusted.

Ensure that the mirrors are properly adjusted so you can see:

- The entire area in front of the bus from the front bumper at ground level to a point where direct vision is possible. Direct vision and mirror view vision should overlap.
- The right and left front tires touching the ground.
- The area from the front of the bus to the service door.
- These mirrors, along with the convex and flat mirrors, should be viewed in a logical sequence to ensure that a child or object is not in any of the danger zones.

Figure 10.4 illustrates how the left and right side crossover mirrors should be adjusted.

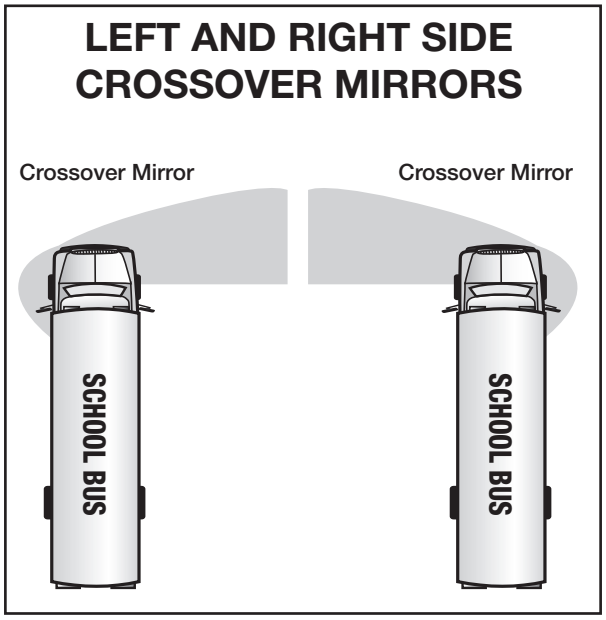

Figure 10.4

10.1.6 – Overhead Inside Rearview Mirror

This mirror is mounted directly above the windshield on the driver's side area of the bus. This mirror is used to monitor passenger activity inside the bus. It may provide limited visibility directly in back of the bus if the bus is equipped with a glass-bottomed rear emergency door. There is a blind spot area directly behind the driver's seat as well as a large blind spot area that begins at the rear bumper and could extend up to 400 feet or more behind the bus. You must use the exterior side mirrors to monitor traffic that approaches and enters this area.

You should position the mirror to see:

- The top of the rear window in the top of the mirror.
- All of the students, including the heads of the students right behind you.

10.2 – Loading and Unloading

More students are killed while getting on or off a school bus each year than are killed as passengers inside of a school bus. As a result, knowing what to do before, during, and after loading or unloading students is critical. This section will give you specific procedures to help you avoid unsafe conditions which could result in injuries and fatalities during and after loading and unloading students.

The information in this section is intended to provide a broad overview, but is not a definitive set of actions. It is imperative that you learn and obey the state laws and regulations governing loading/unloading operations in your state.

10.2.1 – Approaching the Stop

Each school district establishes official routes and official school bus stops. All stops should be approved by the school district prior to making the stop. You should never change the location of a bus stop without written approval from the appropriate school district official.

You must use extreme caution when approaching a school bus stop. You are in a very demanding situation when entering these areas. It is critical that you understand and follow all state and local laws and regulations regarding approaching a school bus stop. This would involve the proper use of mirrors, alternating flashing lights, and when equipped, the moveable stop signal arm and crossing control arm.

When **approaching the stop**, you should:

- Approach cautiously at a slow rate of speed.
- Look for pedestrians, traffic, or other objects before, during, and after coming to a stop.
- Continuously check all mirrors.
- If the school bus is so equipped, activate alternating flashing amber warning lights at least 200 feet or approximately 5-10 seconds before the school bus stop or in accordance with state law.
- Turn on right turn signal indicator about 100-300 feet or approximately 3-5 seconds before pulling over.
- Continuously check mirrors to monitor the danger zones for students, traffic, and other objects.
- Move as far as possible to the right on the traveled portion of the roadway.

When **stopping** you should:

- Bring school bus to a full stop with the front bumper at least 10 feet away from students at the designated stop. This forces the students to walk to the bus so you have a better view of their movements.
- Place transmission in Park, or if there is no Park shift point, in Neutral and set the parking brake at each stop.
- Activate alternating red lights when traffic is a safe distance from the school bus and ensure stop arm is extended.
- Make a final check to see that all traffic has stopped before completely opening the door and signaling students to approach.

10.2.2 – Loading Procedures

- Perform a safe stop as described in subsection 10.2.1.
- Students should wait in a designated location for the school bus, facing the bus as it approaches.
- Students should board the bus only when signaled by the driver.
- Monitor all mirrors continuously.
- Count the number of students at the bus stop and be sure all board the bus. If possible, know names of students at each stop. If there is a student missing, ask the other students where the student is.
- Have the students board the school bus slowly, in single file, and use the handrail. The dome light should be on while loading in the dark.
- Wait until students are seated and facing forward before moving the bus.
- Check all mirrors. Make certain no one is running to catch the bus.
- If you cannot account for a student outside, secure the bus, take the key, and check around and underneath the bus.
- When all students are accounted for, prepare to leave by:
  - Closing the door.
  - Engaging the transmission.
  - Releasing the parking brake.
  - Turning off alternating flashing red lights.
  - Turning on left turn signal.
  - Checking all mirrors again.
  - Allowing congested traffic to disperse.
- When it is safe, move the bus to enter traffic flow and continue the route.

The loading procedure is essentially the same wherever you load students, but there are slight differences. When students are loading at the school campus, you should:

- Turn off the ignition switch.
- Remove key if leaving driver's compartment.
- Position yourself to supervise loading as required or recommended by your state or local regulations.

10.2.3 – Unloading Procedures on the Route

- Perform a safe stop at designated unloading areas as described in subsection 10.2.1.
- Have the students remain seated until told to exit.
- Check all mirrors.
- Count the number of students while unloading to confirm the location of all students before pulling away from the stop.
- Tell students to exit the bus and walk at least 10 feet away from the side of the bus to a position where the driver can plainly see all students.
- Check all mirrors again. Make sure no students are around or returning to the bus.
- If you cannot account for a student outside the bus, secure the bus, and check around and underneath the bus.
- When all students are accounted for, prepare to leave by:
  - Closing the door.
  - Engaging transmission.
  - Releasing parking brake.
  - Turning off alternating flashing red lights.
  - Turning on left turn signal.
  - Checking all mirrors again.
  - Allowing congested traffic to disperse.
- When it is safe, move the bus, enter the traffic flow and continue the route.

Note. If you have missed a student's unloading stop, do not back up. Be sure to follow local procedures.

Additional Procedures for Students That Must Cross the Roadway. You should understand what students should do when exiting a school bus and crossing the street in front of the bus. In addition, the school bus driver should understand that students might not always do what they are supposed to do. If a student or students must cross the roadway, they should follow these procedures:

- Walk approximately 10 feet away from the side of the school bus to a position where you can see them.
- Walk to a location at least 10 feet in front of the right corner of the bumper, but still remaining away from the front of the school bus.
- Stop at the right edge of the roadway. You should be able to see the student's feet.

When students reach the edge of the roadway, they should:

- Stop and look in all directions, making sure the roadway is clear and is safe.
- Check to see if the red flashing lights on the bus are still flashing.
- Wait for your signal before crossing the roadway.

Upon your signal, the students should:

- Cross far enough in front of the school bus to be in your view.
- Stop at the left edge of the school bus, stop, and look again for your signal to continue to cross the roadway.

- Look for traffic in both directions, making sure roadway is clear.
- Proceed across the roadway, continuing to look in all directions.

Note: The school bus driver should enforce any state or local regulations or recommendations concerning student actions outside the school bus.

10.2.4 – Unloading Procedures at School

State and local laws and regulations regarding unloading students at schools, particularly in situations where such activities take place in the school parking lot or other location that is off the traveled roadway, are often different than unloading along the school bus route. It is important that the school bus driver understands and obeys state and local laws and regulations. The following procedures are meant to be general guidelines.

When unloading at the school you should follow these procedures:

- Perform a safe stop at designated unloading areas as described in subsection 10.2.1.
- Secure the bus by:
  - Turning off the ignition switch.
  - Removing key if leaving driver's compartment.
- Have the students remain seated until told to exit.
- Position yourself to supervise unloading as required or recommended by your state or local regulations.
- Have students exit in orderly fashion.
- Observe students as they step from bus to see that all move promptly away from the unloading area.
- Walk through the bus and check for hiding/ sleeping students and items left by students.
- Check all mirrors. Make certain no students are returning to the bus.
- If you cannot account for a student outside the bus and the bus is secure, check around and underneath the bus.
- When all students are accounted for, prepare to leave by:
  - Closing the door.
  - Fastening safety belt.
  - Starting engine.
  - Engaging the transmission.
  - Releasing the parking brake.
  - Turning off alternating flashing red lights.
  - Turning on left turn signal.
  - Checking all mirrors again.
  - Allowing congested traffic to disperse.

When it is safe, pull away from the unloading area.

10.2.5 – Special Dangers of Loading and Unloading

Dropped or Forgotten Objects. Always focus on students as they approach the bus and watch for any who disappear from sight.

Students may drop an object near the bus during loading and unloading. Stopping to pick up the object, or returning to pick up the object may cause the student to disappear from the driver's sight at a very dangerous moment.

Students should be told to leave any dropped object and move to a point of safety out of the danger zones and attempt to get the driver's attention to retrieve the object.

Handrail Hang-ups. Students have been injured or killed when clothing, accessories, or even parts of their body get caught in the handrail or door as they exited the bus. You should closely observe all students exiting the bus to confirm that they are in a safe location prior to moving the bus.

10.2.6 – Post-trip Inspection

When your route or school activity trip is finished, you should conduct a post-trip inspection of the bus.

You should walk through the bus and around the bus looking for the following:

- Articles left on the bus.
- Sleeping students.
- Open windows and doors.
- Mechanical/operational problems with the bus, with special attention to items that are unique to school buses – mirror systems, flashing warning lamps and stop signal arms.
- Damage or vandalism.

Any problems or special situations should be reported immediately to your supervisor or school authorities.

10.3 – Emergency Exit and Evacuation

An emergency situation can happen to anyone, anytime, anywhere. It could be a crash, a stalled school bus on a railroad-highway crossing or in a high-speed intersection, an electrical fire in the engine compartment, a medical emergency to a student on the school bus, etc. Knowing what to do in an emergency–before, during and after an evacuation–can mean the difference between life and death.

10.3.1 – Planning for Emergencies

Determine Need to Evacuate Bus. The first and most important consideration is for you to recognize the hazard. If time permits, school bus drivers should contact their dispatcher to explain the situation before making a decision to evacuate the school bus.

As a general rule, student safety and control is best maintained by keeping students on the bus during an emergency and/or impending crisis situation, if so doing does not expose them to unnecessary risk or injury. Remember, the decision to evacuate the bus must be a timely one.

A decision to evacuate should include consideration of the following conditions:

- Is there a fire or danger of fire?
- Is there a smell of raw or leaking fuel?
- Is there a chance the bus could be hit by other vehicles?
- Is the bus in the path of a sighted tornado or rising waters?
- Are there downed power lines?
- Would removing students expose them to speeding traffic, severe weather, or a dangerous environment such as downed power lines?
- Would moving students complicate injuries such as neck and back injuries and fractures?
- Is there a hazardous spill involved? Sometimes, it may be safer to remain on the bus and not come in contact with the material.

Mandatory Evacuations. The driver must evacuate the bus when:

- The bus is on fire or there is a threat of a fire.
- The bus is stalled on or adjacent to a railroad-highway crossing.
- The position of the bus may change and increase the danger.
- There is an imminent danger of collision.
- There is a need to quickly evacuate because of a hazardous materials spill.

10.3.2 – Evacuation Procedures

Be Prepared and Plan Ahead. When possible, assign two responsible, older student assistants to each emergency exit. Teach them how to assist the other students off the bus. Assign another student assistant to lead the students to a "safe place" after evacuation. However, you must recognize that there may not be older, responsible students on the bus at the time of the emergency. Therefore, emergency evacuation procedures must be explained to all students. This includes knowing how to operate the various emergency exits and the importance of listening to and following all instructions given by you.

Some tips to determine a safe place:

- A safe place will be at least 100 feet off the road in the direction of oncoming traffic. This will keep the students from being hit by debris if another vehicle collides with the bus.
- Lead students upwind of the bus if fire is present.
- Lead students as far away from railroad tracks as possible and in the direction of any oncoming train.
- Lead students upwind of the bus at least 300 feet if there is a risk from spilled hazardous materials.
- If the bus is in the direct path of a sighted tornado and evacuation is ordered, escort students to a nearby ditch or culvert if shelter in a building is not readily available, and direct them to lie face down, hands covering their head. They should be far enough away so the bus cannot topple on them.
- Avoid areas that are subject to flash floods.

General Procedures. Determine if evacuation is in the best interest of safety.

- Determine the best type of evacuation:
  - Front, rear or side door evacuation, or some combination of doors.
  - Roof or window evacuation.
- Secure the bus by:
  - Placing transmission in Park, or if there is no shift point, in Neutral.
  - Setting parking brakes.
  - Shutting off the engine.
  - Removing ignition key.
  - Activating hazard-warning lights.
- If time allows, notify dispatch office of evacuation location, conditions, and type of assistance needed.
- Dangle radio microphone or telephone out of driver's window for later use, if operable.
- If no radio, or radio is inoperable, dispatch a passing motorist or area resident to call for help. As a last resort, dispatch two older, responsible students to go for help.
- Order the evacuation.
- Evacuate students from the bus.

Do not move a student you believe may have suffered a neck or spinal injury unless his or her life is in immediate danger.

Special procedures must be used to move neck spinal injury victims to prevent further injury.

- Direct a student assistant to lead students to the nearest safe place.
- Walk through the bus to ensure no students remain on the bus. Retrieve emergency equipment.
- Join waiting students. Account for all students and check for their safety.
- Protect the scene. Set out emergency warning devices as necessary and appropriate.
- Prepare information for emergency responders.

10.4 – Railroad-highway Crossings

10.4.1 – Types of Crossings

Passive Crossings. This type of crossing does not have any type of traffic control device. You must stop at these crossings and follow proper procedures. However, the decision to proceed rests entirely in your hands. Passive crossings require you to recognize the crossing, search for any train using the tracks and decide if there is sufficient clear space to cross safely. Passive crossings have yellow circular advance warning signs, pavement markings and cross-bucks to assist you in recognizing a crossing.

Active Crossings. This type of crossing has a traffic control device installed at the crossing to regulate traffic at the crossing. These active devices include flashing red lights, with or without bells and flashing red lights with bells and gates.

10.4.2 – Warning Signs and Devices

Advance Warning Signs. The round, black-on-yellow warning sign is placed ahead of a public railroad-highway crossing. The advance warning sign tells you to slow down, look and listen for the train, and be prepared to stop at the tracks if a train is coming. See Figure 10.5.

Figure 10.5

Pavement Markings. Pavement markings mean the same as the advance warning sign. They consist of an "X" with the letters ""RR" and a no-passing marking on two-lane roads.

There is also a no passing zone sign on two-lane roads. There may be a white stop line painted on the pavement before the railroad tracks. The front of the school bus must remain behind this line while stopped at the crossing. See Figure 10.6.

Figure 10.6

Cross-buck Signs. This sign marks the crossing. It requires you to yield the right-of-way to the train. If there is no white line painted on the pavement, you must stop the bus before the cross-buck sign. When the road crosses over more than one set of tracks, a sign below the cross-buck indicates the number of tracks. See Figure 10.7.

Figure 10.7

Flashing Red Light Signals. At many highway-rail grade crossings, the cross-buck sign has flashing red lights and bells. When the lights begin to flash, stop! A train is approaching. You are required to yield the right-of-way to the train. If there is more than one track, make sure all tracks are clear before crossing. See Figure 10.8.

Gates. Many railroad-highway crossings have gates with flashing red lights and bells. Stop when the lights begin to flash and before the gate lowers across the road lane. Remain stopped until the gates go up and the lights have stopped flashing. Proceed when it is safe. If the gate stays down after the train passes, do not drive around the gate. Instead, call your dispatcher. See Figure 10.8.

10.4.3 – Recommended Procedures

Each state has laws and regulations governing how school buses must operate at railroad-highway crossings. It is important for you to understand and obey these state laws and regulations. In general, school buses must stop at all crossings, and ensure it is safe before proceeding across the tracks. The specific procedures required in each state vary.

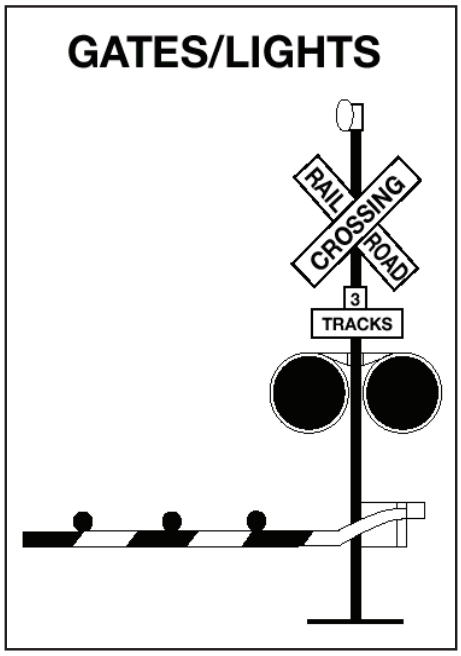

Figure 10.8

A school bus is one of the safest vehicles on the highway. However, a school bus does not have the slightest edge when involved in a crash with a train. Because of a train's size and weight it cannot stop quickly. An emergency escape route does not exist for a train. You can prevent school bus/train crashes by following these recommended procedures.

- Approaching the Crossing:
  - Slow down, including shifting to a lower gear in a manual transmission bus, and test your brakes.
  - Activate hazard lights approximately 200 feet before the crossing. Make sure your intentions are known.
  - Scan your surroundings and check for traffic behind you.
  - Stay to the right of the roadway if possible.
  - Choose an escape route in the event of a brake failure or problems behind you.
- At the Crossing:
  - Stop no closer than 15 feet and no farther than 50 feet from the nearest rail, where you have the best view of the tracks.
  - Place the transmission in Park, or if there is no Park shift point, in Neutral and press down on the service brake or set the parking brakes.
  - Turn off all radios and noisy equipment, and silence the passengers.
  - Open the service door and driver's window. Look and listen for an approaching train.
- Crossing the Track:
  - Check the crossing signals again before proceeding.
  - At a multiple-track crossing, stop only before the first set of tracks. When you are sure no train is approaching on any track, proceed across all of the tracks until you have completely cleared them.
  - Cross the tracks in a low gear. Do not change gears while crossing.
  - If the gate comes down after you have started across, drive through it even if it means you will break the gate.

10.4.4 – Special Situations

Bus Stalls or Trapped on Tracks. If your bus stalls or is trapped on the tracks, get everyone out and off the tracks immediately. Move everyone far from the bus at an angle, which is both away from the tracks and toward the train.

Police Officer at the Crossing. If a police officer is at the crossing, obey directions. If there is no police officer, and you believe the signal is malfunctioning, call your dispatcher to report the situation and ask for instructions on how to proceed.

Obstructed View of Tracks. Plan your route so it provides maximum sight distance at highway-rail grade crossings. Do not attempt to cross the tracks unless you can see far enough down the track to

know for certain that no trains are approaching. Passive crossings are those that do not have any type of traffic control device. Be especially careful at "passive" crossings. Even if there are active railroad signals that indicate the tracks are clear, you must look and listen to be sure it is safe to proceed.

Containment or Storage Areas. If it won't fit, don't commit! Know the length of your bus and the size of the containment area at highway-rail crossings on the school bus route, as well as any crossing you encounter in the course of a school activity trip. When approaching a crossing with a signal or stop sign on the opposite side, pay attention to the amount of room there. Be certain the bus has enough containment or storage area to completely clear the railroad tracks on the other side if there is a need to stop. As a general rule, add 15 feet to the length of the school bus to determine an acceptable amount of containment or storage area.

10.5 – Student Management

10.5.1 – Don't Deal with On-bus Problems When Loading and Unloading

In order to get students to and from school safely and on time, you need to be able to concentrate on the driving task.

Loading and unloading requires all your concentration. Don't take your eyes off what is happening outside the bus.

If there is a behavior problem on the bus, wait until the students unloading are safely off the bus and have moved away. If necessary, pull the bus over to handle the problem.

10.5.2 – Handling Serious Problems

Tips on handling serious problems:

- Follow your school's procedures for discipline or refusal of rights to ride the bus.
- Stop the bus. Park in a safe location off the road, perhaps a parking lot or a driveway.
- Secure the bus. Take the ignition key with you if you leave your seat.
- Stand up and speak respectfully to the offender or offenders. Speak in a courteous manner with a firm voice. Remind the offender of the expected behavior. Do not show anger, but do show that you mean business.
- If a change of seating is needed, request that the student move to a seat near you.
- Never put a student off the bus except at school or at his or her designated school bus stop. If you feel that the offense is serious enough that you cannot safely drive the bus, call for a school administrator or the police to come and remove the student.
- Always follow your state or local procedures for requesting assistance.

10.6 – Antilock Braking Systems

10.6.1 – Vehicles Required to Have Antilock Braking Systems

The Department of Transportation requires that antilock braking systems be on:

- Air brakes vehicles, (trucks, buses, trailers and converter dollies) built on or after March 1, 1998.
- Hydraulically braked trucks and buses with a gross vehicle weight rating of 10,000 lbs or more built on or after March 1, 1999.

Many buses built before these dates have been voluntarily equipped with ABS.

Your school bus will have a yellow ABS malfunction lamp on the instrument panel if it is equipped with ABS.

10.6.2 – How ABS Helps You

When you brake hard on slippery surfaces in a vehicle without ABS, your wheels may lock up. When your steering wheels lock up, you lose steering control. When your other wheels lock up, you may skid or even spin the vehicle.

ABS helps you avoid wheel lock up and maintain control. You may or may not be able to stop faster with ABS, but you should be able to steer around an obstacle while braking, and avoid skids caused by over braking.

10.6.3 – Braking with ABS

When you drive a vehicle with ABS, you should brake as you always have. In other words:

- Use only the braking force necessary to stop safely and stay in control.
- Brake the same way, regardless of whether you have ABS on the bus. However, in emergency braking, do not pump the brakes on a bus with ABS.
- As you slow down, monitor your bus and back off the brakes (if it is safe to do so) to stay in control.

10.6.4 – Braking if ABS is Not Working

Without ABS, you still have normal brake functions. Drive and brake as you always have.

Vehicles with ABS have yellow malfunction lamps to tell you if something is not working. The yellow ABS malfunction lamp is on the bus's instrument panel.

As a system check on newer vehicles, the malfunction lamp comes on at start-up for a bulb check and then goes out quickly. On older systems, the lamp could stay on until you are driving over five mph.

If the lamp stays on after the bulb check, or goes on once you are under way, you may have lost ABS control at one or more wheels.

Remember, if your ABS malfunctions, you still have regular brakes. Drive normally, but get the system serviced soon.

10.6.5 – Safety Reminders

ABS won't allow you to drive faster, follow more closely, or drive less carefully.

ABS won't prevent power or turning skids – ABS should prevent brake-induced skids but not those caused by spinning the drive wheels or going too fast in a turn.

ABS won't necessarily shorten stopping distance. ABS will help maintain vehicle control, but not always shorten stopping distance.

ABS won't increase or decrease ultimate stopping power – ABS is an "add-on" to your normal brakes, not a replacement for them.

ABS won't change the way you normally brake. Under normal brake conditions, your vehicle will stop as it always stopped. ABS only comes into play when a wheel would normally have locked up because of over braking.

ABS won't compensate for bad brakes or poor brake maintenance.

Remember: The best vehicle safety feature is still a safe driver.

Remember: Drive so you never need to use your ABS.

Remember: If you need it, ABS could help to prevent a serious crash.

10.7 – Special Safety Considerations

10.7.1 – Strobe Lights

Some school buses are equipped with roof-mounted, white strobe lights. If your bus is so equipped, the overhead strobe light should be used when you have limited visibility. This means that you cannot easily see around you – in front, behind, or beside the school bus. Your visibility could be only slightly limited or it could be so bad that you can see nothing at all. In all instances, understand and obey your state or local regulations concerning the use of these lights.

10.7.2 – Driving in High Winds

Strong winds affect the handling of the school bus! The side of a school bus acts like a sail on a sailboat. Strong winds can push the school bus sideways. They can even move the school bus off the road or, in extreme conditions, tip it over.

If you are caught in strong winds:

- Keep a strong grip on the steering wheel. Try to anticipate gusts.
- You should slow down to lessen the effect of the wind, or pull off the roadway and wait.
- Contact your dispatcher to get more information on how to proceed.

10.7.3 – Backing

Backing a school bus is strongly discouraged. You should back your bus only when you have no other safe way to move the vehicle. You should never back a school bus when students are outside of the bus. Backing is dangerous and increases your risk of a collision. If you have no choice and you must back your bus, follow these procedures:

- Post a lookout. The purpose of the lookout is to warn you about obstacles, approaching persons, and other vehicles. The lookout should not give directions on how to back the bus.
- Signal for quiet on the bus.
- Constantly check all mirrors and rear windows.
- Back slowly and smoothly.
- If no lookout is available:
  - ➢ Set the parking brake.
  - ➢ Turn off the motor and take the keys with you.
  - ➢ Walk to the rear of the bus to determine whether the way is clear.

- If you must back-up at a student pick-up point, be sure to pick up students before backing and watch for late comers at all times.
- Be sure that all students are in the bus before backing.
- If you must back-up at a student drop-off point, be sure to unload students after backing.

10.7.4 – Tail Swing

A school bus can have up to a three-foot tail swing. You need to check your mirrors before and during any turning movements to monitor the tail swing.

Section 10
Test Your Knowledge

1. Define the danger zone. How far does the danger zone extend around the bus?
2. What should you be able to see if the outside flat mirrors are adjusted properly? The outside convex mirrors? The crossover mirrors?
3. You are loading students along the route. When should you activate your alternating flashing amber warning lights?
4. You are unloading students along your route. Where should students walk to after exiting the bus?
5. After unloading at school, why should you walk through the bus?
6. What position should students be in front of the bus before they cross the roadway?
7. Under what conditions must you evacuate the bus?
8. How far from the nearest rail should you stop at a highway-rail crossing?
9. What is a passive highway-rail crossing? Why should you be extra cautious at this type of crossing?
10. How should you use your brakes if your vehicle is equipped with antilock brakes (ABS)?

These questions may be on your test. If you can't answer them all, re-read Section 10.

Section 11
Vehicle Inspection Test

This Section Covers

- **Internal Inspection**
- **External Inspection**

During the Vehicle inspection, you must show that the vehicle is safe to drive. You will have to walk around the vehicle, name and point to/ touch each item and explain to the examiner what you are checking and why.

Any vehicle that has components marked or labeled cannot be used for the Vehicle Inspection test.

11.1 All Vehicles

Study the following vehicle parts for the type of vehicle you will be using during the CDL skills tests. You should be able to identify each part and tell the examiner what you are looking for or inspecting.

11.1.1 Engine Compartment (Engine Off)

Leaks/Hoses

Look for puddles on the ground.
Look for dripping fluids on underside of engine and transmission.
Inspect hoses for condition and leaks.

Oil Level

- Check oil level when engine is off.
- Indicate where dipstick is located.
- Check that the oil level is within safe operating range. Level must be above refill mark.

Coolant Level

- Looks at sight glass on radiator or coolant reservoir; adequate level will show in sight glass. If no sight glass is available, you must describe what s/he would look for after removing radiator cap.

Power Steering Fluid

- Checks the dipstick and sees where the fluid level is relative to the refill mark or checks sight glass. Level must be above refill mark.

Engine Compartment Belts

- Check the following belts for snugness (1/2 to 3/4 inch play at center of belt), cracks, frays, loose fibers or signs of wear:
  - Power steering belt.
  - Water pump belt.
  - Alternator belt.
  - Air compressor belt.

Note: If any of the components listed above are not belt driven, you must:

- Tell the examiner which component(s) are not belt driven.
- Make sure component(s) are operating properly, are not damaged or leaking, and are mounted securely.

Safe Start

- Place gearshift lever in neutral (or park, for automatic transmissions).
- Depress clutch before attempting to start the vehicle
- Start the vehicle and keep clutch depressed until engine reaches idling speed.
- Then release clutch slowly.

11.1.2 – Cab Check/Engine Start

Oil Pressure Gauge

- Make sure oil pressure gauge is working.
- Check that pressure gauge shows increasing or normal oil pressure or that the warning light goes off.
- If equipped, oil temperature gauge should begin a gradual rise to the normal operating range.

Temperature Gauge

- Make sure the temperature gauge is working.
- Temperature should begin to climb to the normal operating range or temperature light should be off.

Air Gauge

- Check that the air gauge is working properly and that the air compressor builds the air pressure to governor cut-out at approximately 120-140 psi or as specified by manufacturer.

Ammeter/Voltmeter

- Check that gauges show alternator and/or generator is charging or that warning light is off.

Mirrors and Windshield

- Mirrors should be clean and adjusted properly from the inside.
- Windshield should be clean with no illegal stickers, no obstructions, or damage to the glass.

Emergency Equipment

- Check for spare electrical fuses.
- Check for three red reflective triangles and 6 fusees or 3 liquid burning flares.
- Check that the fire extinguisher is properly charged and securely mounted.

Note: If the vehicle is not equipped with electrical fuses, you must mention this to the examiner.

Wipers/Washers

- Check that wiper arms and blades are secure, not damaged, and operate smoothly.
- If equipped, windshield washers must operate correctly.

Lights/Reflectors/Reflector Tape Condition (Sides & Rear)

- Test that dash indicators work when corresponding lights are turned on:
  - Left turn signal.
  - Right turn signal.
  - Four-way emergency flashers.
  - High beam headlight.
  - Anti-lock Braking System (ABS) indicator.
- Check that all external lights and reflective equipment are clean and functional and none or broken or missing. Light and reflector checks include verification of correct color:
  - Clearance lights (red on rear, amber elsewhere).
  - Headlights (high and low beams).
  - Taillights.
  - Backing lights.
  - Turn signals.
  - Four-way flashers.
  - Brake lights.
  - Red reflectors (on rear) and amber reflectors (elsewhere).
  - Reflector tape condition

Note: Checks of brake, turn signal and four-way flasher functions must be done separately.

Horn

- Check that air horn and/or electric horn work.

Heater/Defroster

- Test that the heater and defroster work.

Parking Brake Check

- With air pressure built to governor cutout and the parking brake engaged (trailer brakes released on combination vehicles), check that the parking brake will hold vehicle by gently trying to pull forward with parking brake on.
- With air pressure built to governor cutout, the parking brake released and the trailer parking brake engaged (combination vehicles only), check that the trailer parking brake will hold vehicle by gently trying to pull forward with the trailer parking brake on.

Hydraulic Brake Check

- Pump the brake pedal three times, then hold it down for five seconds. The brake pedal should not move (depress) during the five seconds.
- If equipped with a hydraulic brake reserve (back-up) system, with the key off, depress the brake pedal and listen for the sound of the reserve system electric motor.

Check that the warning buzzer or light is off.

Air Brake Check (Air Brake Equipped Vehicles Only)

- Failure to perform all three components of the air brake check correctly will result in an automatic failure of the vehicle inspection test. Air brake safety devices vary. However, this procedure is designed to see that any safety device operates correctly as air pressure drops from normal to a low air condition. For safety purposes, in areas where an incline is present, you will use wheel chocks during the air brake check. The proper procedures for inspecting the air brake system are as follows:

1. With the air pressure built up to governor cutoff (120 – 140 psi), shut off the engine leaving the key in the "on" or "battery charge" position, chock your wheels if necessary, release the parking brake (all vehicles), and the tractor protection valve (combination vehicle) and fully apply the foot brake. Hold the foot brake for one minute. Check the air gauge to see if the air pressure drops more than three pounds in one minute (single vehicle) or four pounds in one minute (combination vehicle).
2. Begin fanning off the air pressure by rapidly applying and releasing the foot brake. Low air warning devices (buzzer, light, flag) should activate before air pressure drops below 55 psi or level specified by the manufacturer..
3. Continue to fan off the air pressure. At approximately 40 psi on a tractor-trailer combination vehicle (or level specified by the manufacturer), the tractor protection valve and parking brake valve should close (pop out). On other combination vehicle types and single vehicle types, the parking brake valve should close (pop out).

Service Brake Check

You will be required to check the application of air or hydraulic service brakes**.** This procedure is designed to determine that the brakes are working correctly and that the vehicle does not pull to one side or the other.

Pull forward at 5 mph, apply the service brake and stop. Check to see that the vehicle does not pull to either side and that it stops when brake is applied.

Safety Belt

- Check that the safety belt is securely mounted, adjusts, latches properly and is not ripped or frayed.

11.2 – External Inspection (All Vehicles)

11.2.1– Steering

Steering Box/Hoses

- Check that the steering box is securely mounted and not leaking. Look for any missing nuts and/or , bolts.
- Check for power steering fluid leaks or damage to power steering hoses.

Steering Linkage

- See that connecting links, arms, and rods from the steering box to the wheel are not worn or cracked.
- Check that joints and sockets are not worn or loose and that there are no missing nuts, bolts, or cotter keys.

11.2.2 – Suspension

Springs/Air/Torque

- Look for missing, shifted, cracked, or broken leaf springs.
- Look for broken or distorted coil springs.
- If vehicle is equipped with torsion bars, torque arms, or other types of suspension components, check that they are not damaged and are mounted securely.
- Air ride suspension should be checked for damage and leaks.

Mounts

- Look for cracked or broken spring hangers, missing or damaged bushings, and broken, loose, or missing bolts, u-bolts or other axle mounting parts. (The mounts should be checked at each point where they are secured to the vehicle frame and axle[s]).

Shock Absorbers

- See that shock absorbers are secure and that there are no leaks.

Note: Be prepared to perform the same suspension components inspection on every axle (power unit and trailer, if equipped).

11.2.3 – Brakes

Slack Adjustors and Pushrods

- Look for broken, loose, or missing parts.
- For manual slack adjustors, the brake pushrod should not move more than one inch (with the brakes released) when pulled by hand.

Brake Chambers

- See that brake chambers are not leaking, cracked, or dented and are mounted securely. There are no loose or missing clamps.

Brake Hoses/Lines

- Look for cracked, worn, or leaking hoses, lines, and couplings.

Drum Brake

- Check for cracks, dents, or holes. Also check for loose or missing bolts.
- Check for contaminates such debris or oil/ grease.
- Brake linings (where visible) should not be worn dangerously thin.

Brake Linings

- On some brake drums, there are openings where the brake linings can be seen from outside the drum. For this type of drum, check that a visible amount of brake lining is showing.

Note: Be prepared to perform the same brake components inspection on every axle (power unit and trailer, if equipped).

11.2.4 – Wheels

Rims

- Check for damaged or bent rims. Rims cannot have welding repairs. Check rims for rust trails that may indicate the rim is loose on the wheel.

Tires

- The following items must be inspected on every tire:

Tread depth: Check for minimum tread depth (4/32 on steering axle tires, 2/32 on all other tires).

Tire condition: Check that tread is evenly worn and look for cuts or other damage to tread or sidewalls. Also, make sure that valve caps and stems are not missing, broken, or damaged.

Tire inflation: Check for proper inflation by using a tire gauge. Note: You will not get credit if you simply kick the tires or use a mallet to check for proper inflation.

Hub Oil Seals/Axle Seals

- See that hub oil/grease seals and axle seals are not leaking and, if wheel has a sight glass, oil level is adequate.

Lug Nuts

- Check that all lug nuts are present, free of cracks and distortions, and show no signs of looseness such as rust trails or shiny threads.
- Make sure all bolt holes are not cracked or distorted.

Spacers or Budd Spacing

- If equipped, check that spacers are not bent, damaged, or rusted through; and are centered with dual tires evenly separated..
- Check the space between the tires for debris and/or foreign objects.

Note: Be prepared to perform the same wheel inspection on every axle (power unit and trailer, if equipped).

11.2.5 – Side of Vehicle

Door(s)/Mirror(s)

- Check that door(s) are not damaged and that they open and close properly from the outside.
- Hinges should be secure with seals intact.
- Check that mirror(s) and mirror brackets are not damaged and are mounted securely with no loose fittings.

Fuel Tank

- Check that tank(s) are secure, cap(s) are tight, and that there are no leaks from tank(s) or lines.

Drive Shaft

- See that drive shaft is not bent or cracked.
- Couplings should be secure and free of foreign objects.

Exhaust System

- Check system for damage and signs of leaks such as rust or carbon soot. Exhaust system should not have cracks, holes or severe dents
- System should be connected tightly and mounted securely.

Frame

- Look for cracks, broken welds, holes or other damage to the longitudinal frame members, cross members, box, and floor.

11.2.6 – Rear of Vehicle

Splash Guards

- If equipped, check that splash guards or mud flaps are not damaged and are mounted securely.

Doors/Ties/Lifts

- Check that doors and hinges are not damaged and that they open, close, and latch properly from the outside, if equipped.
- Ties, straps, chains, and binders must also be secure.
- If equipped with a cargo lift, look for leaking, damaged or missing parts and explain how it should be checked for correct operation.
- Lift must be fully retracted and latched securely.

11.2.7 – Tractor/Coupling

Air/Electric Lines

- Listen for air leaks. Check that air hoses and electrical lines are not cut, chafed, spliced, or worn (steel braid should not show through).
- Make sure air and electrical lines are not tangled, pinched, or dragging against tractor parts.

Catwalk/Steps

- Check that the catwalk is solid, clear of objects, and securely bolted to tractor frame.
- Check that steps leading to the cab entry and catwalk (if equipped) are solid, clear of objects, and securely bolted to tractor frame.

Mounting Bolts

- Look for loose or missing mounting brackets, clamps, bolts, or nuts. Both the fifth wheel and the slide mounting must be solidly attached.
- Check for loose or missing mounting bolts and for broken welds for pintle hook or other type of hitch mount, and tongue/draw-bar assembly to ensure that they are solidly attached in place.
- On other types of coupling systems (i.e., ball hitch, pintle hook, etc.), inspect all coupling components and mounting brackets for missing or broken parts.

Hitch Release Lever

- Check to see that the hitch release lever is in place and is secure.

Locking Jaws

- Look into fifth wheel gap and check that locking jaws are fully closed around the kingpin.
- On other types of coupling systems (i.e., ball hitch, pintle hook, etc.), inspect the locking mechanism for missing or broken parts and make sure it is locked securely. If present, safety cables or chains must be secure and free of kinks and excessive slack.

5th Wheel Skid Plate

- Check for proper lubrication and that 5th wheel skid plate is securely mounted to the platform and that all bolts and pins are secure and not missing.

Platform (Fifth Wheel)

- Check for cracks or breaks in the platform structure which supports the fifth wheel skid plate.

Release Arm (Fifth Wheel)

- If equipped, make sure the release arm is in the engaged position and the safety latch is in place.

Kingpin/Apron/Gap

- Explain that locking jaws holds kingpin in place and that the kingpin is not bent or damaged
- Make sure the visible part of the apron is not bent, cracked, or broken.
- Check that the trailer is lying flat on the fifth wheel skid plate (no gap).
- Check for kingpin lock.

Locking Pins (Fifth Wheel)

- If equipped, look for loose or missing pins in the slide mechanism of the sliding fifth wheel. If air powered, check for leaks.
- Make sure locking pins are fully engaged.
- Check that the fifth wheel is positioned properly so that the tractor frame will clear the landing gear during turns.

Sliding Pintle

- Check the sliding pintle hook for excessive wear and to ensure it is secure with no loose or missing nuts or bolts and cotter pin is in place.

Tongue or Draw-bar

- Check that the tongue/draw-bar is not bent or twisted and checks for broken welds and stress cracks.
- Check that the tongue/draw-bar eye is not worn excessively.

Tongue Storage Area

- Check that the storage area is solid and secured to the tongue.
- Check that cargo in the storage area i.e. chains, binders, etc. are secure.

11.3 – School Bus Only

Emergency Equipment

- In addition to checking for spare electrical fuses (if equipped), three red reflective triangles, 6 fusees or 3 liquid burning flares and a properly charged and rated fire extinguisher, school bus drivers must also inspect the following emergency equipment:
  - ➢ Emergency Kit
  - ➢ Body Fluid Cleanup Kit

Lighting Indicators

- In addition to checking the lighting indicators listed in Section 10.2 of this manual, school bus drivers must also check the following lighting indicators (internal panel lights):
  - ➢ Alternately flashing amber lights indicator, if equipped.
  - ➢ Alternately flashing red lights indicator.
  - ➢ Strobe light indicator, if equipped.

Lights/Reflectors

- In addition to checking the lights and reflective devices listed in Section 10.2 of this manual, school bus drivers must also check the following (external) lights and reflectors:
  - ➢ Strobe light, if equipped is operational and is not broken.
  - ➢ Stop arm light, if equipped.
  - ➢ Alternately flashing amber lights, if equipped are operational and not broken.
  - ➢ Alternately flashing red lights, on both the front and back of the vehicle are operational and not broken.

Student Mirrors

- In addition to checking the external mirrors, school bus drivers must also check the internal and external mirrors used for observing students:
- Check for proper adjustment.

- Checks that all internal and external mirrors and mirror brackets are not damaged and are mounted securely with no loose fittings.
- Checks that visibility is not impaired due to dirty mirrors.

Stop Arm/Safety Arm

- If equipped, check the stop arm to see that it is mounted securely to the frame of the vehicle. Also, check for loose fittings and damage. Checks that stop arm extends fully when operated.

Passenger Entry/Lift

- Check that the entry door is not damaged, operates smoothly, and closes securely from the inside.
- Hand rails are secure and the step light is working, if equipped.
- The entry steps must be clear with the treads not loose or worn excessively.
- If equipped with a handicap lift, look for leaking, damaged, or missing parts and explain how lift should be checked for correct operation. Lift must be fully retracted and latched securely.

Emergency Exit

- Demonstrate that at least one emergency exit is not damaged, operates smoothly, and closes securely from the inside.
- Check that release handle can be operated properly from both inside and outside the vehicle.
- Point out and describe how all other emergency exits operate
- Check that any emergency exit warning devices are working properly.

Seating

- Look for broken seat frames and check that seat frames are firmly attached to the floor.
- Check that seat cushions are attached securely to the seat frames.

11.4 – Trailer

11.4.1 – Trailer Front

Air/Electrical Connections

- Check that trailer air connectors are sealed and in good condition.
- Make sure glad hands are locked in place, free of damage or air leaks.
- Make sure the trailer electrical plug is firmly seated and locked in place.

Header Board

- If equipped, check the header board to see that it is secure, free of damage, and strong enough to contain cargo.
- If equipped, the canvas or tarp carrier must be mounted and fastened securely.
- On enclosed trailers, check the front area for signs of damage such as cracks, bulges, or holes.

11.4.2 – Side of Trailer

Landing Gear

- Check that the landing gear is fully raised, has no missing parts, crank handle is secure, and the support frame and landing pads are not damaged.
- If power operated, check for air or hydraulic leaks.

Doors/Ties/Lifts

- If equipped, check that doors are not damaged. Check that doors open, close, and latch properly from the outside.
- Check that ties, straps, chains, and binders are secure.
- If equipped with a cargo lift, look for leaking, damaged or missing parts and explain how it should be checked for correct operation.
- Lift should be fully retracted and latched securely.

Frame

- Look for cracks, broken welds, holes or other damage to the frame, cross members, box, and floor.

Tandem Release Arm/Locking Pins

- If equipped, make sure the locking pins are locked in place and release arm is secured.

11.4.3 – Remainder of Trailer

Remainder of Trailer

- Please refer to Section 11.2 of this manual for detailed inspection procedures regarding the following components:
  - Wheels.
  - Suspension system.
  - Brakes.
  - Doors/ties/lift.
  - Splash guards.

11.5 – Coach/Transit Bus

11.5.1 – Passenger Items

Passenger Entry/Lift

- Check that entry doors operate smoothly and close securely from the inside.
- Check that hand rails are secure and, if equipped, that the step light(s) are working.
- Check that the entry steps are clear, with the treads not loose or worn excessively.
- If equipped with a handicap lift, look for any leaking, damaged or missing part, and explain how it should be checked for correct operation.
- Lift should be fully retracted and latched securely.

Emergency Exits

- Make sure that all emergency exits are not damaged, operate smoothly, and close securely from the inside.
- Check that any emergency exit warning devices are working.

Passenger Seating

- Look for broken seat frames and check that seat frames are firmly attached to the floor.
- Check that seat cushions are attached securely to the seat frames.

11.5.2 – Entry/ Exit

Doors/Mirrors

- Check that entry/exit doors are not damaged and operate smoothly from the outside. Hinges should be secure with seals intact.
- Make sure that the passenger exit mirrors and all external mirrors and mirror brackets are not damaged and are mounted securely with no loose fittings.

11.5.3 – External Inspection of Coach/ Transit Bus

Level/Air Leaks

- See that the vehicle is sitting level (front and rear), and if air-equipped, check for audible air leaks from the suspension system.

Fuel Tank(s)

- See that fuel tank(s) are secure with no leaks from tank(s) or lines.

Baggage Compartments

- Check that baggage and all other exterior compartment doors are not damaged, operate properly, and latch securely.

Battery/Box

- Wherever located, see that battery(s) are secure, connections are tight, and cell caps are present.
- Battery connections should not show signs of excessive corrosion.
- Check that battery box and cover or door is not damaged and is secure.

11.5.4 – Remainder of Coach/ Transit Bus

Remainder of Vehicle

- Please refer to Section 11.2 of this manual for detailed inspection procedures for the remainder of the vehicle.

Remember, the Vehicle Inspection must be passed before you can proceed to the Basic Control Skills test.

11.6 – Taking the CDL Vehicle Inspection Test

11.6.1 – Class A Vehicle Inspection Test

If you are applying for a Class A CDL, you will be required to perform one of the four versions of a Vehicle inspection in the vehicle you have brought with you for testing. Each of the four tests are equivalent and you will not know which test you will take until just before the testing begins.

All of the tests include an engine start, an in-cab-inspection, and an inspection of the coupling system. Then, your test may require an inspection of the entire vehicle or only a portion of the vehicle which your CDL Examiner will explain to you.

11.6.2 – Class B and C Vehicle Inspection Test

If you are applying for a Class B CDL, you will be required to perform one of the three versions of a Vehicle inspection in the vehicle you have brought with you for testing. Each of the three tests are equivalent and you will not know which test you will take until just before the testing begins.

All of the tests include an engine start and an in-cab inspection. Then, your test may require an inspection of the entire vehicle or only a portion of the vehicle which your CDL Examiner will explain to you. You will also have to inspect any special features of your vehicle (e.g, school or transit bus).

Emergency Equipment

CDL Vehicle Inspection Memory Aid

Combination Vehicles

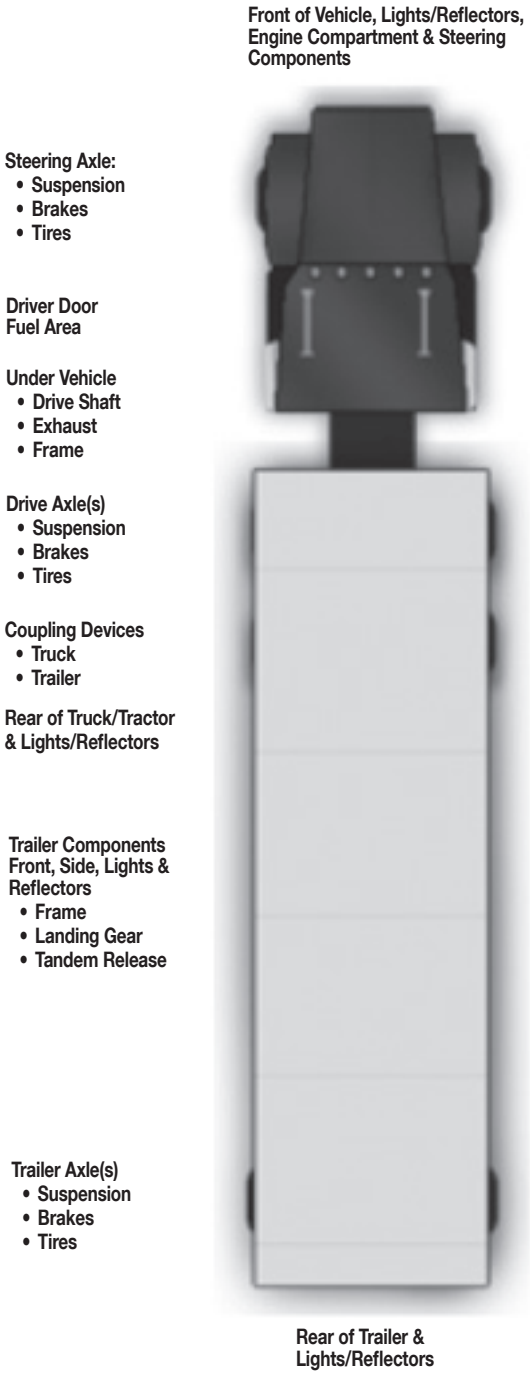

Straight Truck or Bus

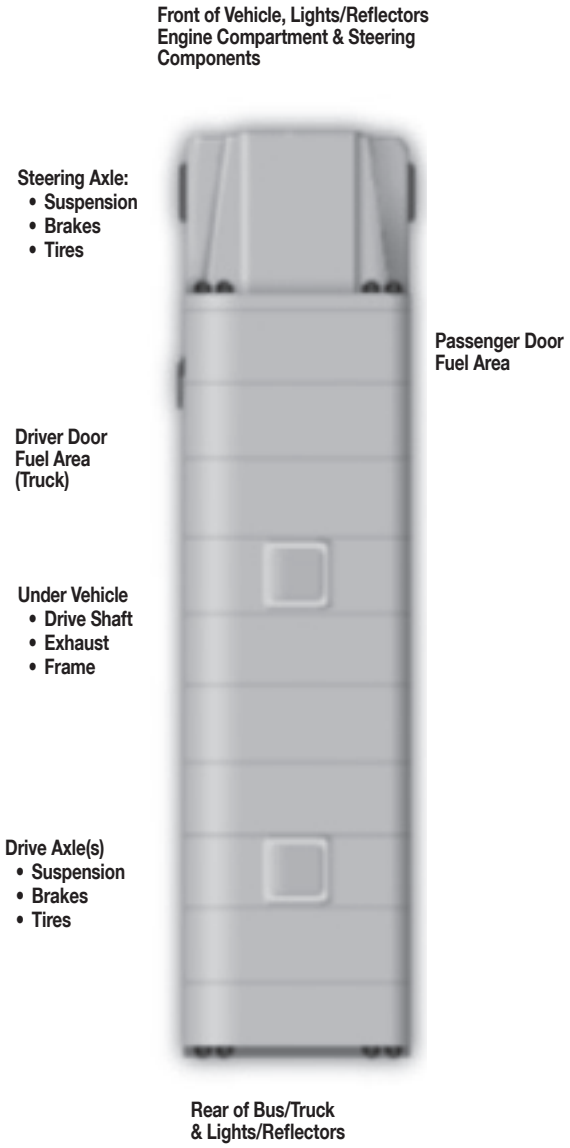

Section 12
Basic Vehicle Control Skills Test

This Section Covers

- **Skills Test Scoring**
- **Skills Test Exercises**

Your basic control skills could be tested using one or more of the following exercises off-road or somewhere on the street during the road test:

- Straight line backing.
- Offset back/right
- Offset back/left
- Parallel park (driver side).
- Parallel park (conventional).
- Alley dock.

These exercises are shown in Figures 12-1 through 12-6.

12.1 Scoring

- Crossing Boundaries (encroachments)
- Pull-ups
- Outside Vehicle Observations (looks)
- Final Position/Inside Parallel

Encroachments – The examiner will score the number of times you touch or cross over an exercise boundary line or cone with any portion of your vehicle. Each encroachment will count as an error.

Pull-ups – When a driver stops and pulls forward to clear an encroachment or to get a better position, it is scored as a **"pu**ll-up**"**. Stopping without changing direction does not count as a pull-up. You will not be penalized for initial pull-ups. However, an excessive number of pull-ups, will count as errors.

Outside Vehicle Observations (Looks) – You may be permitted to safely stop and exit the vehicle to check the external position of the vehicle (look). When doing so, you must place the vehicle in neutral and set the parking brake(s). Then, when exiting the vehicle, you must do so safely by facing the vehicle and maintaining three points of contact with the vehicle at all times (when exiting a bus, maintain a firm grasp on the handrail at all times). If you do not safely secure the vehicle or safely exit the vehicle it may result in an automatic failure of the basic control skills test.

The maximum number of times that you may look to check the position of you vehicle is two (2) except for the Straight Line Backing exercise, which allows one look. Each time you open the door, move from a seated position where in physical control of the vehicle or on a bus walk to the back of a bus to get a better view, it is scored as a "look".

Final Position/Inside Parallel – It is important that you finish each exercise exactly as the examiner has instructed you. If you do not maneuver the vehicle into its final position as described by the examiner, you will be penalized and could fail the basic skills test.

12.2 Exercises

12.2.1 – Straight Line Backing

You may be asked to back your vehicle in a straight line between two rows of cones without touching or crossing over the exercise boundaries. (See Figure 12.1.)

12.2.2 – Offset Back/Right

You may be asked to back into a space that is to the right rear of your vehicle. You will drive straight forward the outer boundary. From that position you must back the vehicle into the **opposite** lane until the front of your vehicle has passed the first set of cones without striking boundary lines or cones. (See Figure 12.2)

12.2.3 – Offset Back/Left

You may be asked to back into a space that is to the left rear of your vehicle. You will drive straight forward the outer boundary. From that position, you must back the vehicle into the opposite lane until the front of your vehicle has passed the first set of cones without striking boundary lines or cones. (See Figure 12.3)

12.2.4 – Parallel Park (Driver Side)

You may be asked to park in a parallel parking space that is on your left. You are to drive past the entrance to the parallel parking space with your vehicle parallel to the parking area; and back into the space without crossing front, side or rear boundaries marked by cones. You are required to get your entire vehicle completely into the space. (See Figure 12.4)

12.2.5 – Parallel Park (Conventional)

You may be asked to park in a parallel parking space that is on your right. You are to drive past the entrance to the parallel parking space with your vehicle parallel to the parking area; and back into the space without crossing front, side or rear boundaries marked by cones. You are required to get your entire vehicle completely into the space. (See Figure 12.5)

12.2.6 – Alley Dock

You may be asked to sight-side back your vehicle into an alley. You will drive past the alley and position your vehicle parallel to the outer boundary. From that position, back into the alley bringing the rear of your vehicle within three feet of the rear of the alley without touching boundary lines or cones. Your vehicle must be straight within the alley/lane when you have completed the maneuver. (See Figure 12.6.)

Figure 12.1: Straight Line Backing

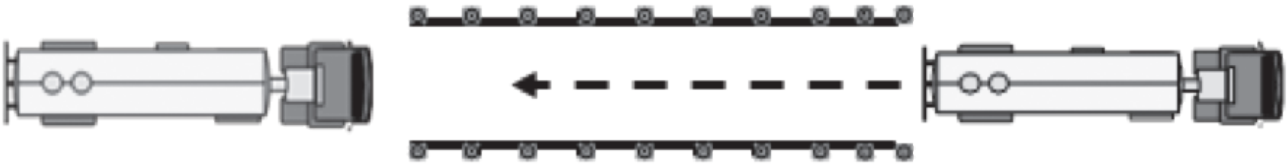

Figure 12.2: Offset Back/Right

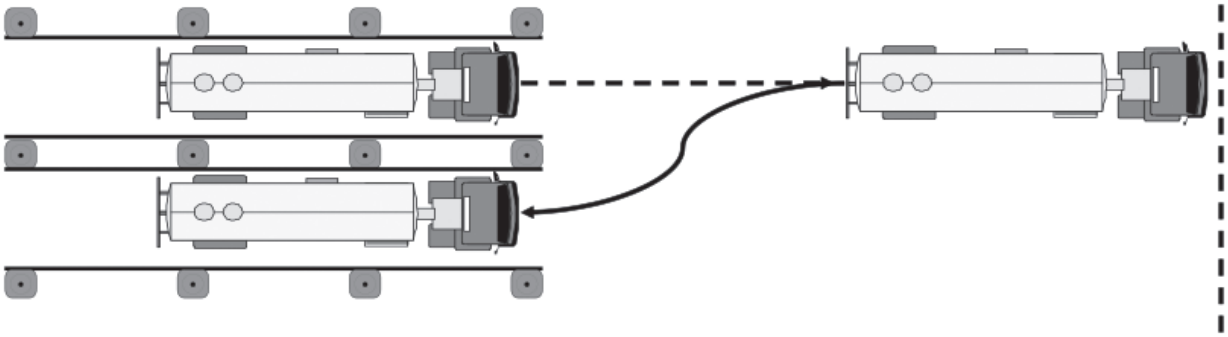

Figure 12.3: Offset Back/Left

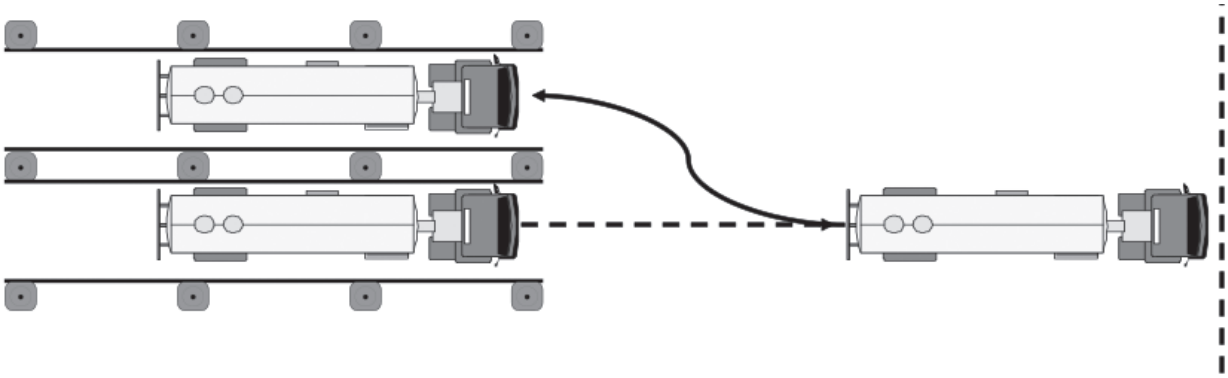

Figure 12.4: Parallel Park (Driver Side)

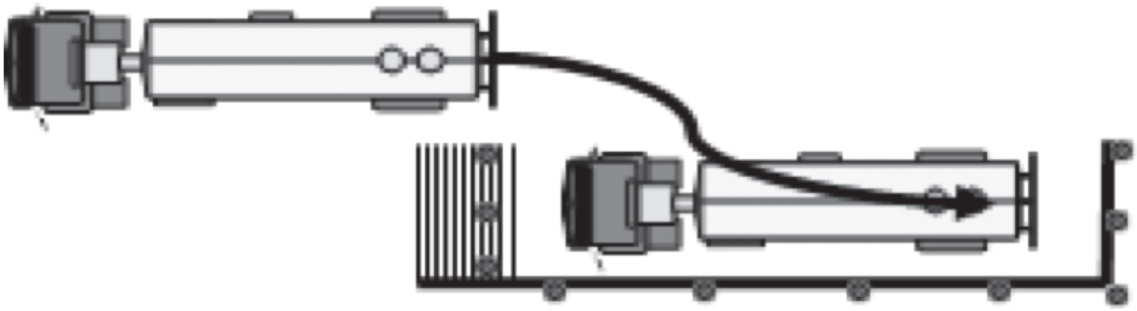

Figure 12.5: Parallel Park (Conventional)

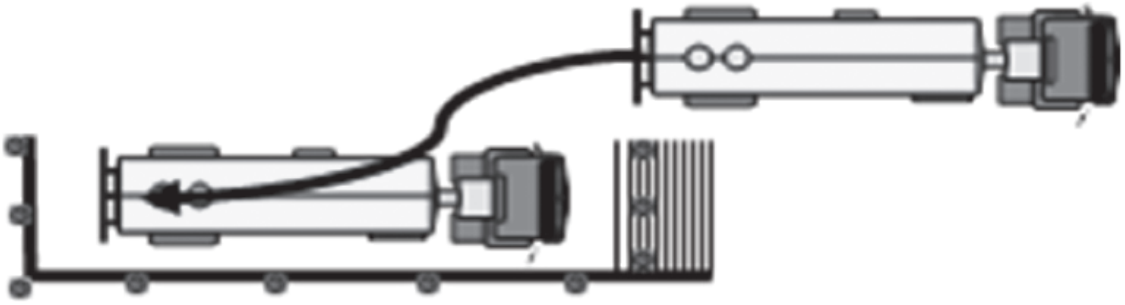

Figure 12.4: Parallel Park (Driver Side)

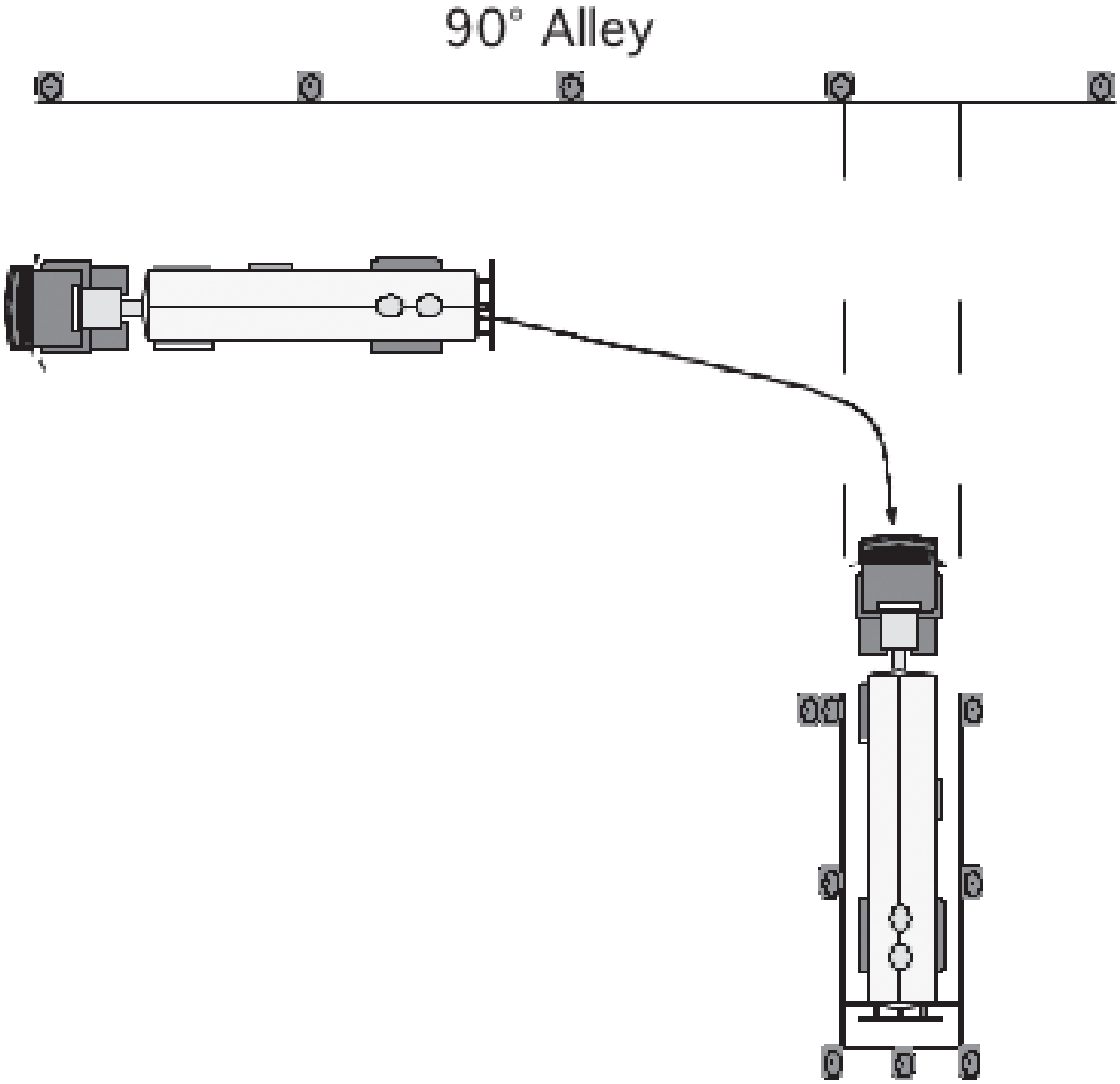

Section 13
On-Road Driving

This Section Covers

- **How You Will Be Tested**

You will drive over a test route that has a variety of traffic situations. At all times during the test, you must drive in a safe and responsible manner; and you must:

- Wear your safety belt.
- Obey all traffic signs, signals, and laws.
- Complete the test without an accident or moving violation.

During the driving test, the examiner will be scoring you on specific driving maneuvers as well as on your general driving behavior. You will follow the directions of the examiner. Directions will be given to you so you will have plenty of time to do what the examiner has asked. You will not be asked to drive in an unsafe manner.

If your test route does not have certain traffic situations, you may be asked to simulate a traffic situation. You will do this by telling the examiner what you are or would be doing if you were in that traffic situation.

13.1 – How You Will Be Tested

13.1.1 – Turns

You have been asked to make a turn:

- Check traffic in all directions.
- Use turn signals and safely get into the lane needed for the turn.

As you approach the turn:

- Use turn signals to warn others of your turn.
- Slow down smoothly, change gears as needed to keep power, but do not coast unsafely. Unsafe coasting occurs when your vehicle is out of gear (clutch depressed or gearshift in neutral) for more than the length of your vehicle.

If you must stop before making the turn:

- Come to a smooth stop without skidding.
- Come to a complete stop behind the stop line, crosswalk, or stop sign.
- If stopping behind another vehicle, stop where you can see the rear tires on the vehicle ahead of you (safe gap).
- Do not let your vehicle roll.
- Keep the front wheels aimed straight ahead.

When ready to turn:

- Check traffic in all directions.
- Keep both hands on the steering wheel during the turn.
- Keep checking your mirror to make sure the vehicle does not hit anything on the inside of the turn.
- Vehicle should not move into oncoming traffic.
- Vehicle should finish turn in correct lane.

After turn:

- Make sure turn signal is off.
- Get up to speed of traffic, use turn signal, and move into right-most lane when safe to do so (if not already there).
- Check mirrors and traffic.

13.1.2 – Intersections

As you approach an intersection:

- Check traffic thoroughly in all directions.
- Decelerate gently.
- Brake smoothly and, if necessary, change gears.
- If necessary, come to a complete stop (no coasting) behind any stop signs, signals, sidewalks, or stop lines maintaining a safe gap behind any vehicle in front of you.
- Your vehicle must not roll forward or backward.

When driving through an intersection:

- Check traffic thoroughly in all directions.
- Decelerate and yield to any pedestrians and traffic in the intersection.
- Do not change lanes while proceeding through the intersection.
- Keep your hands on the wheel.

Once through the intersection:

- Continue checking mirrors and traffic.
- Accelerate smoothly and change gears as necessary.

13.1.3 – Urban Business

During this part of the test, you are expected to make regular traffic checks and maintain a safe following distance. Your vehicle should be centered in the proper lane (right-most lane) and you should keep up with the flow of traffic but not exceed the posted speed limit.

13.1.4 –Lane Changes

During multiple lane portions of the test, you will be asked to change lanes to the left, and then back to the right. You should make the necessary traffic checks first, then use proper signals and smoothly change lanes when it is safe to do so.

13.1.5 – Expressway or Rural/Limited Access Highway

Before entering the expressway:

- Check traffic.
- Use proper signals.
- Merge smoothly into the proper lane of traffic.

Once on the expressway:

- Maintain proper lane positioning, vehicle spacing, and vehicle speed.
- Continue to check traffic thoroughly in all directions.

When exiting the expressway:

- Make necessary traffic checks.
- Use proper signals.
- Decelerate smoothly in the exit lane.
- Once on the exit ramp, you must continue to decelerate within the lane markings and maintain adequate spacing between your vehicle and other vehicles.

13.1.6 – Stop/Start

For this maneuver, you will be asked to pull your vehicle over to the side of the road and stop as if you were going to get out and check something on your vehicle. You must check traffic thoroughly in all directions and move to the right-most lane or shoulder of road.

As you prepare for the stop:

- Check traffic.
- Activate your right turn signal.
- Decelerate smoothly, brake evenly, change gears as necessary.
- Bring your vehicle to a full stop without coasting.

Once stopped:

- Vehicle must be parallel to the curb or shoulder of the road and safely out of the traffic flow.
- Vehicle should not be blocking driveways, fire hydrants, intersections, signs, etc.
- Cancel your turn signal.
- Activate your four-way emergency flashers.
- Apply the parking brake.
- Move the gear shift to neutral or park.
- Remove your feet from the brake and clutch pedals.

When instructed to resume:

- Check traffic and your mirrors thoroughly in all directions.
- Turn off your four-way flashers.
- Activate the left turn signal.
- When traffic permits, you should release the parking brake and pull straight ahead.
- Do not turn the wheel before your vehicle moves.
- Check traffic from all directions, especially to the left.
- Steer and accelerate smoothly into the proper lane when safe to do so.
- Once your vehicle is back into the flow of traffic, cancel your left turn signal.

13.1.7 – Curve

When approaching a curve:

- Check traffic thoroughly in all directions.
- Before entering the curve, reduce speed so further braking or shifting is not required in the curve.
- Keep vehicle in the lane.
- Continue checking traffic in all directions.

13.1.8 – Railroad Crossing

Before reaching the crossing, all commercial drivers should:

- Decelerate, brake smoothly, and shift gears as necessary.
- Look and listen for the presence of trains.
- Check traffic in all directions.

Do not stop, change gears, pass another vehicle, or change lanes while any part of your vehicle is in the crossing.

If you are driving a bus, a school bus, or a vehicle displaying placards, you should be prepared to observe the following procedures at every railroad crossing (unless the crossing is exempt):

- As the vehicle approaches a railroad crossing, activate the four-way flashers.
- Stop the vehicle within 50 feet but not less than 15 feet from the nearest rail.
- Listen and look in both directions along the track for an approaching train and for signals indicating the approach of a train. If operating a bus, you may also be required to open the window and door prior to crossing tracks.

- Keep hands on the steering wheel as the vehicle crosses the tracks.
- Do not stop, change gears, or change lanes while any part of your vehicle is proceeding across the tracks.
- Four-way flashers should be deactivated after the vehicle crosses the tracks.
- Continue to check mirrors and traffic.

Not all driving road test routes will have a railroad crossing. You may be asked to explain and demonstrate the proper railroad crossing procedures to the examiner at a simulated location.

13.1.9 – Bridge/Overpass/Sign

After driving under an overpass, you may be asked to tell the examiner what the posted clearance or height was. After going over a bridge, you may be asked to tell the examiner what the posted weight limit was. If your test route does not have a bridge or overpass, you may be asked about another traffic sign. When asked, be prepared to identify and explain to the examiner any traffic sign which may appear on the route.

13.1.10 – Student Discharge (School Bus)

If you are applying for a School Bus endorsement, you will be required to demonstrate a student discharge. Please refer to section 10 of this manual.

- As you approach the student pick up, you must:
- Decelerate and approach at a slow rate of speed while continuing to check traffic.
- Activate amber warning lights and right turn signals.
- Move as far as possible to the right on the traveled portion of the roadway.
- Recheck traffic.

As you stop for the student discharge, you must:

- Bring school bus to a complete stop at least 10' away from students at the stop.
- Place the transmission in neutral/park and set the parking brake.
- Activate the stop arm and red warning lights.

When discharging students, you must:

- Communicate to students.
- Check traffic.
- Open the student door.
- Check for students.

When students are crossing, you must:

- Check traffic.
- Communicate to students.
- Check for students.

When resuming from the student discharge, you must:

- Check all mirrors.
- Turn off warning lights and stop arm.
- Close the door
- Check traffic.
- Accelerate away from the stop area.

13.1.11 – General Driving Behaviors

You will be scored on your overall performance in the following general driving behavior categories:

13.1.11(a) – Clutch Usage (for Manual Transmission)

- Always use clutch to shift.
- If equipped with an unsynchronized manual transmission, you must double-clutch when shifting. Do not rev or lug the engine.
- Do not ride clutch to control speed, coast with the clutch depressed, or "pop" the clutch.

13.1.12(b) – Gear Usage (for Manual Transmission)

- Do not grind or clash gears.
- Select gear that does not rev or lug engine.
- Do not shift in turns and intersections.

13.1.13(c) – Brake Usage

- Do not ride or pump brake.
- Do not brake harshly. Brake smoothly using steady pressure.

13.1.14(d) – Lane Usage

- Do not put vehicle over curbs, sidewalks, or lane markings.
- Stop behind stop lines, crosswalks, or stop signs.
- Complete a turn in the proper lane on a multiple lane road (vehicle should finish a left turn in the lane directly to the right of the center line).
- Finish a right turn in the right-most (curb) lane.
- Move to or remain in right-most lane unless lane is blocked.

13.1.15 – Steering

- Do not over or under steer the vehicle.
- Keep both hands on the steering wheel at all times unless shifting. Once you have completed shift, return both hands to the steering wheel.

13.1.16 – Regular Traffic Checks

- Check traffic regularly.
- Check mirrors regularly.
- Check mirrors and traffic before, while in and after an intersection.
- Scan and check traffic in high volume areas and areas where pedestrians are expected to be present.

13.1.17 – Use of Turn Signals

- Use turn signals properly.
- Activate turn signals when required.
- Activate turn signals at appropriate times.
- Cancel turn signals upon completion of a turn or lane change.

NOTES

NOTES

NOTES

NOTES

NOTES

American Association of Motor Vehicle Administrators
4301 Wilson Boulevard, Suite 400
Arlington, Virginia 22203-1867
tel: 703-522-4200
fax: 703-522-1553
Web: www.aamva.org

MARYLAND DEPARTMENT OF TRANSPORTATION
MOTOR VEHICLE ADMINISTRATION

Committed to safety, service and you!

6601 Ritchie Highway, N.E.
Glen Burnie, Maryland 21062

www.MVA.Maryland.gov

DL-151 02-18